THIS DRAWING IS THE PROPERTY OF ANALOG DEVICES INC. IT IS NOT TO BE REPRODUCED OR COPIED, IN WHOLE OR IN PART, OR USED IN FURNISHING INFORMATION TO OTHERS, OR FOR ANY OTHER PURPOSE DETRIMENTAL TO THE INTERESTS OF ANALOG DEVICES.
THE EQUIPMENT SHOWN HEREON MAY BE PROTECTED BY PATENTS OWNED OR CONTROLLED BY ANALOG DEVICES.

## RELAY CONTROL CHART

| CONTROL | CODE | DEVICE | FUNCTION | CONNECTOR |
|---|---|---|---|---|
| | | | | |
| | | | | |
| | | | | |

| REVISIONS | | | |
|---|---|---|---|
| REV | DESCRIPTION | DATE | APPROVED |
| | | | |

# SALLEN KEY LOW PASS FILTER STAGE FOR SINGLE OP AMPS

CAN ALSO BE USED TO CREATE FIRST ORDER LOW PASS STAGE

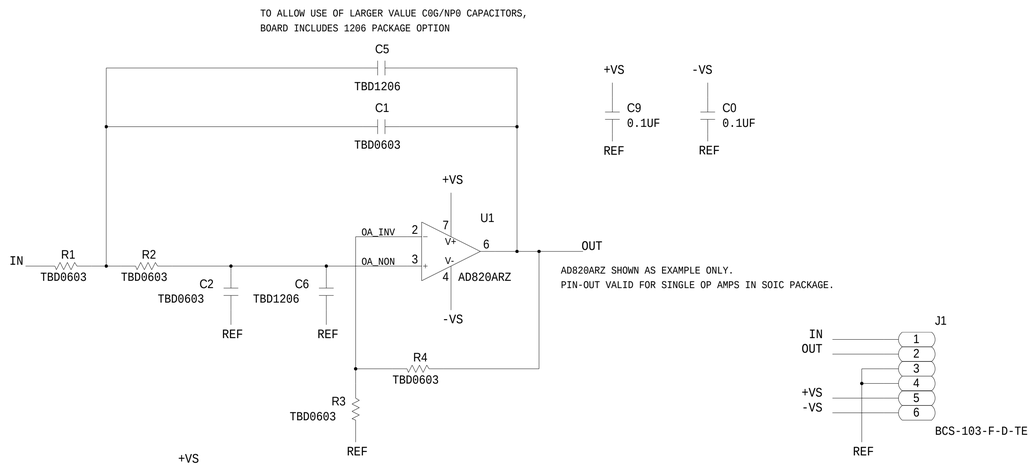


POPULATE EITHER U1 OR U2, NOT BOTH.

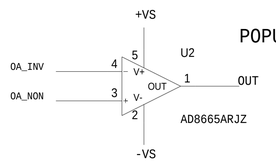


AD8665ARJZ SHOWN AS EXAMPLE ONLY.
PIN-OUT VALID FOR SINGLE OP AMPS IN SOT-23 PACKAGE.

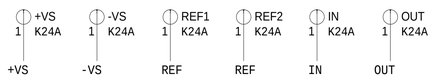


ANALOG DEVICES

SCHEMATIC

EVAL BOARD
SALLEN KEY LOW PASS SINGLE
<PRODUCT_1>

THIS DRAWING IS THE PROPERTY OF ANALOG DEVICES INC.
IT IS NOT TO BE REPRODUCED OR COPIED, IN WHOLE OR
IN PART, OR USED IN FURNISHING INFORMATION TO OTHERS,
OR FOR ANY OTHER PURPOSE DETRIMENTAL TO THE INTERESTS
OF ANALOG DEVICES.
THE EQUIPMENT SHOWN HEREON MAY BE PROTECTED BY PATENTS
OWNED OR CONTROLLED BY OWNED ANALOG DEVICES.

| DESIGN VIEW | DRAWING NO. | REV |
|---|---|---|
| <DESIGN_VIEW> | 02-034896 | A |
| PTD ENGINEER <PTD_ENGINEER> | SIZE D / SCALE <SCALE> | SHEET 2 OF 2 |