SIGN	DATE	DESCRIPTION	APPROVER
1	06/28'13	Add the dimensional label	Jacky
2	06/28'13	Add the teminal lever colour	Jacky
3	06/28'13	Add the colour code	Jacky
4	06/28'13	Change the drawing number	Jacky
5	06/28'13	Add the view	Jacky

Material: *THIS IS CAD DRAWING, DO NOT REVISE MANUALLY!!!*

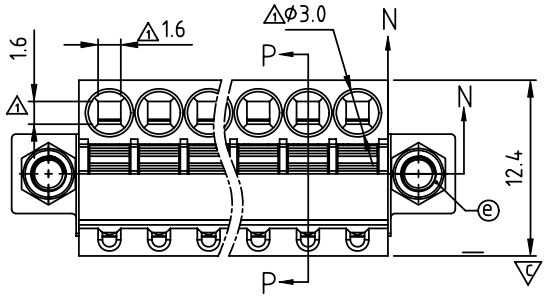

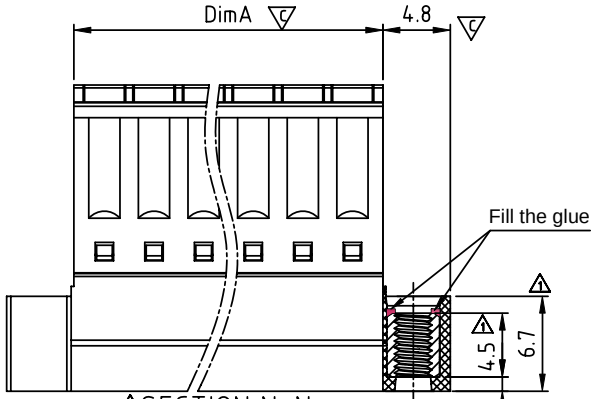

SECTION N-N

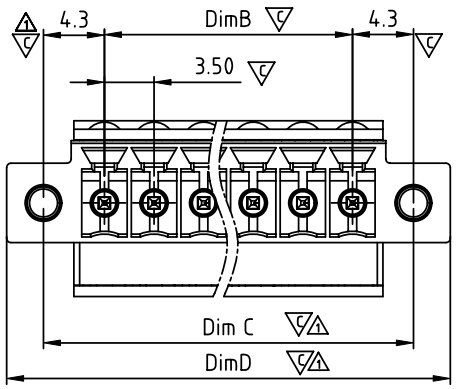

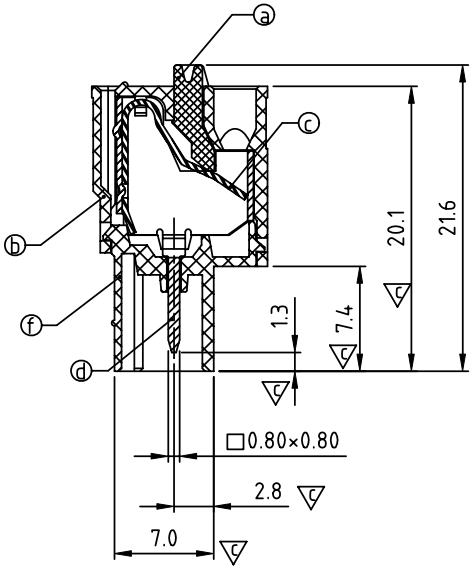

SECTION P-P

- Item ⓐ Terminal(lever): Thermoplastic (UL94V-0)Orange 2
- Item ⓑ Terminal(up body): Thermoplastic (UL94V-0)
- Item ⓒ Wire guard: Stainless steel
- Item ⓓ Male contact pin: Phbz. Tin plated
- Item ⓔ Flange screw NUT: Brass M 2.5
- Item ⓕ Terminal(down body): Thermoplastic (UL94V-0)

Electrical:	cULus
Voltage rating:	300 V
Current rating:	4 A
Wire range:	
Solid wire(AWG):	16-28
Stranded wire(AWG):	16-28
Wire strip length:	9-10 mm
Withstanding Voltage:	1.6 KV
Operating temperature:	-40°C to +115°C
Safety Approval:	c us
Critical dimension:	

H5 xx 1 0 x 2 xxxx G

No. OF POLES
02: 2 POLES
⋮
24: 24 POLES

COLOR
0: BLACK
5: GREEN (RAL 6018/T)
6: BLUE
8: GREY (RAL 7035/D)
3 C: GREEN(RAL 6018/U)

RoHS compliant
(lead<4%)
In copper Alloy

0000: "@" Logo (Standard)
000A: "ANYTEK" Mark

Any special item by
customer requst.
please contact sales
department.

DIM		TOL			
		2P-6P	7P-12P	13P-18P	19P-24P
DimA	(N-1)×3.5+4.3	±0.10	±0.15	±0.20	±0.30
DimB	(N-1)×3.5	±0.10	±0.15	±0.20	±0.30
1 DimC	(N-1)×3.5+8.6	±0.15	±0.20	±0.30	±0.40
1 DimD	(N-1)×3.5+13.8	±0.15	±0.20	±0.30	±0.40

ANYTEK

CUSTOMER COPY

ALL RIGHTS RESERVED. REPRODUCTION OR ISSUE TO THIRD PARTIES IN ANY FORM WHATEVER IS NOT PERMITTED WITHOUT WRITTEN AUTHORITY FROM THE PROPRIETOR. PROPERTY OF ANYTEK TECHNOLOGY CO., LTD

TITLE	H5 3.5mm Flange with NUT Series				
PART NO.	H5xx10x2xxxxG			DWG NO.	8H50103 4
APPROVED	CHECKED	DESIGNED	DRAWN	CUST NO.	
		Jacky 2013.06.28	Jacky 2013.06.28	UNIT: mm	
				SCALE: NONE	
				SHEET: 01/01	REV.: C

Tolerance	
X.	±0.50
X.X	±0.30
X.XX	±0.10
X°	±1°