MICRO SWITCH
A DIVISION OF MINNEAPOLIS-HONEYWELL REGULATOR COMPANY
FREEPORT, ILLINOIS
FED. MFR. CODE 91929

ACTUATOR – SWITCH

CATALOG LISTING
MC7711

ARMY-NAVY PART NO. AN3167-1

(M) MC7711 ISSUE 8 REPLACES

MC7711 RELEASE NO.

M DRAWING NUMBER

ISSUE 11

REVISIONS

A	C014866	OMW 20 SEP 60
B	C016924	OMW 10 APR 62
C	CO 79303	SAD 4 MAR 95

CHECK DAW 26 SEP 60 CHECK CHECK

DRAWN OMW 20 SEP 60

FO-50378

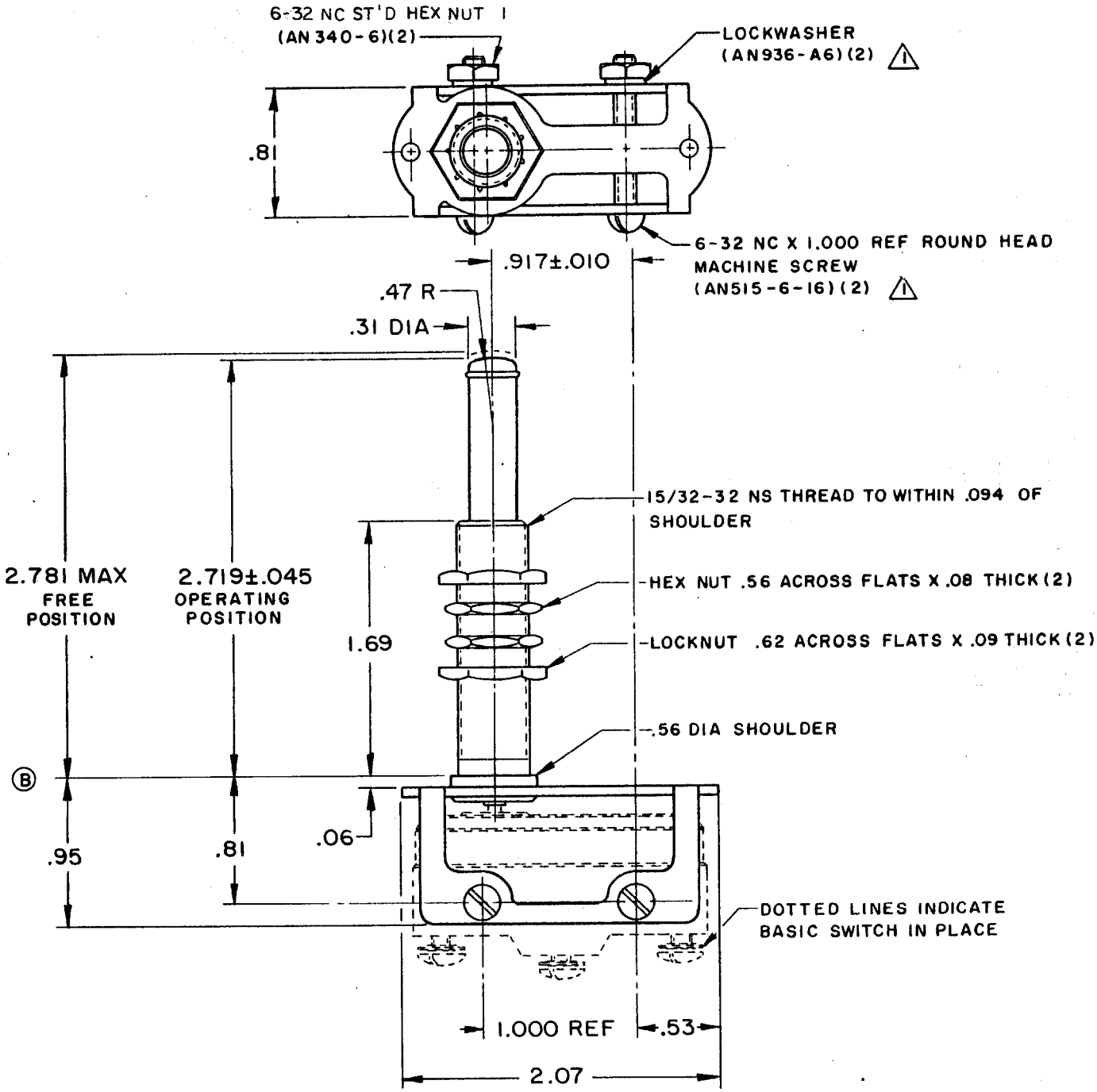

NOTE -
⚠ FURNISHED UNASSEMBLED
2 - ACTUATOR WILL PERFORM SATISFACTORILY IN TEMPERATURES TO MINUS 65° F

THIS DRAWING COVERS A PROPRIETARY ITEM AND IS THE PROPERTY OF MICRO SWITCH, A DIVISION OF MINNEAPOLIS-HONEYWELL REGULATOR CO. THIS DRAWING IS NOT TO BE COPIED OR USED WITHOUT THE APPROVAL OF MICRO SWITCH.

CHARACTERISTICS

FULL OVERTRAVEL FORCE - - - 5 1/2 LB MAX
OVERTRAVEL - - - - - - - - - - - - - .812 MIN

ELECTRICAL DATA

CONTACT ARRANGEMENT	BREAK DISTANCE

SCALE FULL

DO NOT SCALE PRINT

UNLESS OTHERWISE SPECIFIED
DIMENSIONS ARE IN INCHES

TOLERANCES ARE:

ONE PLACE	(.0)	±.030
TWO PLACE	(.00)	±.015
THREE PLACE	(.000)	±.005
ANGLES		±

WEIGHT