THIS DRAWING IS UNPUBLISHED. RELEASED FOR PUBLICATION 20
© COPYRIGHT 20 BY - ALL RIGHTS RESERVED.

REVISIONS					
P	LTR	DESCRIPTION	DATE	DWN	APVD
	A	INITIAL	8FEB2018	GY	CW
	A1	ECR-20-007651	29MAY2020	GY	CW

TYPE 1: FOR WIRE GAUGE 70-185mm^2

类 型 1: 适用于夹线范围 70-185mm^2

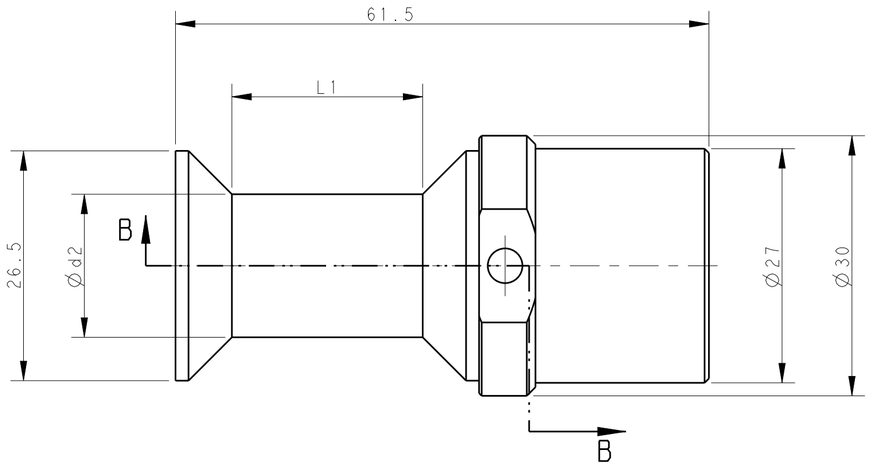

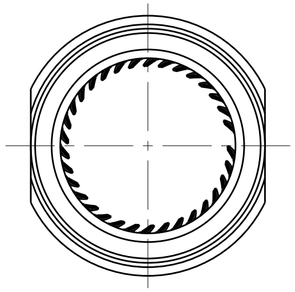

NOTES:

1. TECHNICAL CHARACTERISTICS:
   CONTACT MATERIAL: COPPER
   SURFACE PLATING: SILVER PLATING >= 5μm
   CONTACT RESISTANCE: <=0.3mΩ
   WIRE RANGE: 70-240mm^2

注释:

1. 技术参数:
   针件材料:纯铜
   表面电镀: 镀银>= 5μm
   接触电阻: <=0.3 mΩ
   接线范围: 70-240mm^2

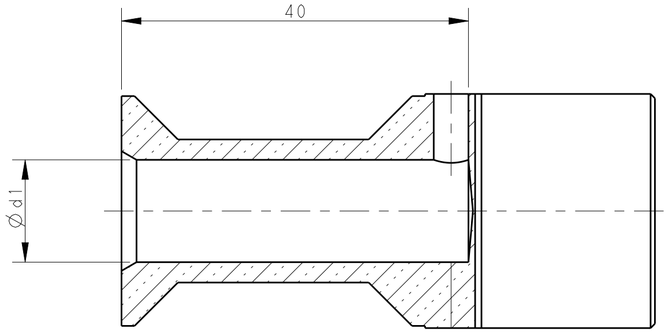

SECTION B-B

CRIMP DIRECTION / 压接指导

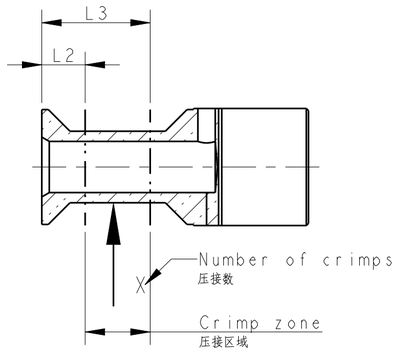

PART NUMBER 料 号	L2	L3	Number of crimps X 压接数 X
T2196502070-001	10	25	1
T2196502095-001	9	26	1
T2196502120-001	8	27	1
T2196502150-001	5	30	2
T2196502185-001	3	28	2

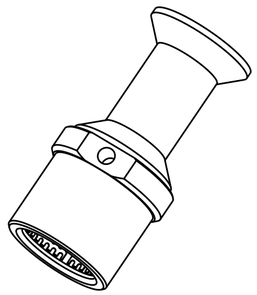

PART NUMBER 料 号		PART DESCRIPTION 零 件 描 述	Ød1	Ød2	L1	WIRE GAUGE 线 规 (mm^2)	STRIPPING LENGTH 剥线长度 (mm)	TYPE 类 型
T2196502070-001	HCM650-FC-70	HCM650 SOCKET CONTACT, CRIMP, 70mm2, COPPER WIHT SILVER PLATING HCM650 母针,冷压,70mm2,铜镀银	11.75	16.5	22	70	42	TYPE 1 类型 1
T2196502095-001	HCM650-FC-95	HCM650 SOCKET CONTACT, CRIMP, 95mm2, COPPER WIHT SILVER PLATING HCM650 母针,冷压,95mm2,铜镀银	13.5	19	24.5	95	42	
T2196502120-001	HCM650-FC-120	HCM650 SOCKET CONTACT, CRIMP, 120mm2, COPPER WIHT SILVER PLATING HCM650 母针,冷压,120mm2,铜镀银	15.5	21	26.5	120	42	
T2196502150-001	HCM650-FC-150	HCM650 SOCKET CONTACT, CRIMP, 150mm2, COPPER WIHT SILVER PLATING HCM650 母针,冷压,150mm2,铜镀银	17	23.5	29	150	42	
T2196502185-001	HCM650-FC-185	HCM650 SOCKET CONTACT, CRIMP, 185mm2, COPPER WIHT SILVER PLATING HCM650 母针,冷压,185mm2,铜镀银	19	25.5	31	185	42	

THIS DRAWING IS A CONTROLLED DOCUMENT.

DIMENSIONS: mm

TOLERANCES UNLESS OTHERWISE SPECIFIED:
0 PLC ±-
1 PLC ±-
2 PLC ±-
3 PLC ±-
4 PLC ±-
ANGLES ±-

MATERIAL -
FINISH -

DWN GINO.YAO 30JAN2018
CHK CHRIS.WANG 30JAN2018
APVD CHRIS.WANG 30JAN2018
PRODUCT SPEC 108-137074
APPLICATION SPEC 114-137074
WEIGHT -

TE Connectivity

NAME HCM650 SOCKET CONTACT

SIZE A2 | CAGE CODE 00779 | DRAWING NO C-T2196502XXX00X | RESTRICTED TO -

CUSTOMER DRAWING | SCALE 1:1 | SHEET 1 OF 2 | REV A1

THIS DRAWING IS UNPUBLISHED. RELEASED FOR PUBLICATION 20
© COPYRIGHT 20 BY - ALL RIGHTS RESERVED.

REVISIONS					
P	LTR	DESCRIPTION	DATE	DWN	APVD
		SEE SHEET 1			

TYPE II: FOR WIRE GAUGE 240mm^2, WITH HEAT-SHRINKABLE INSULATION TUBING

类 型 II: 适用于夹线范围 240mm^2，带热缩绝缘套管

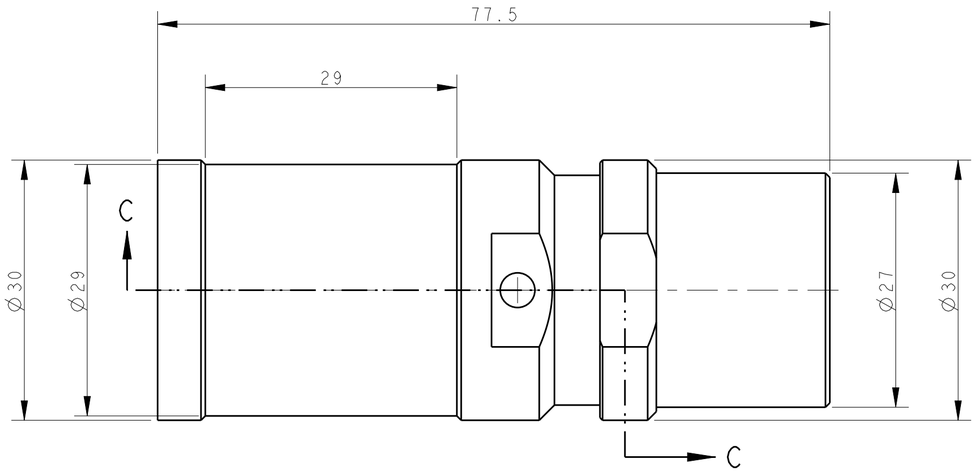

NOTES:

SEE SHEET 1

注释：

见页面1

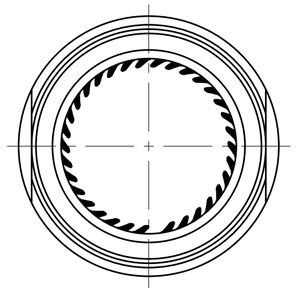

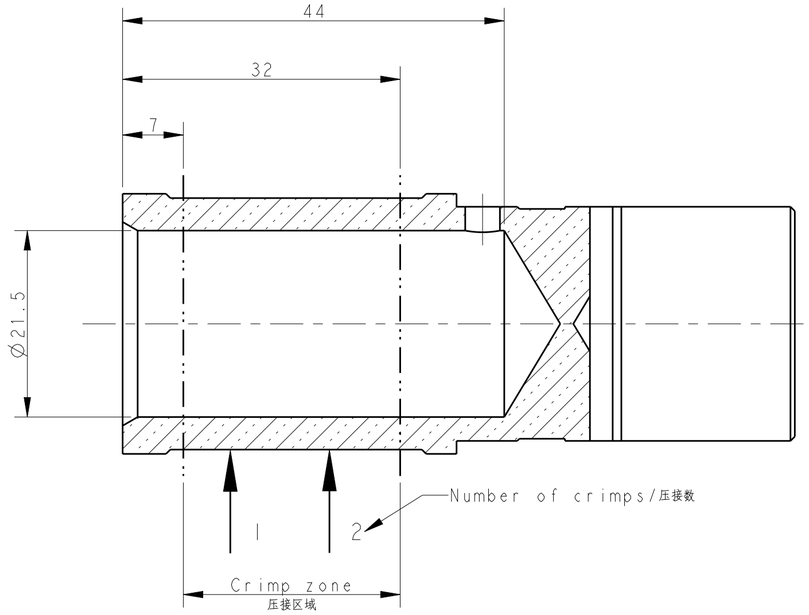

SECTION C-C

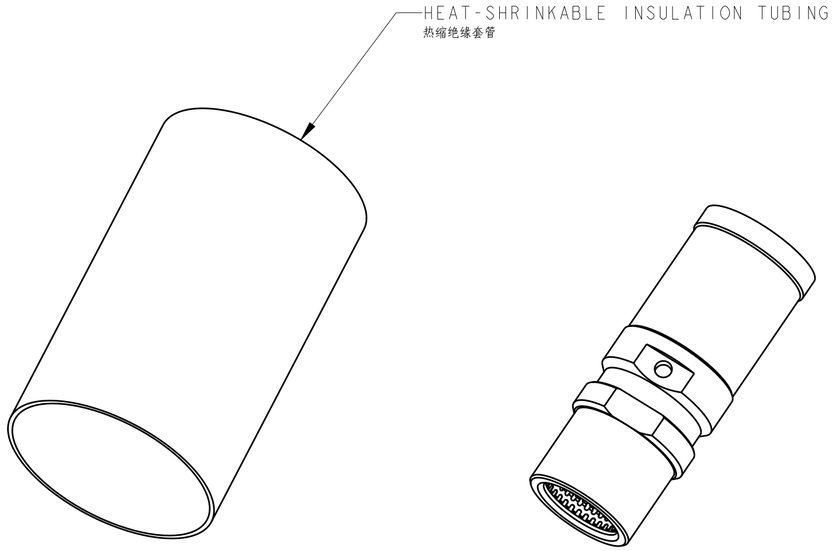

PART NUMBER 料号		PART DESCRIPTION 零件描述	Ød1	Ød2	L1	WIRE GAUGE 线规 (mm^2)	STRIPPING LENGTH 剥线长度 (mm)	TYPE 类型
Obsoleted PN ~~T2196502240-101~~	~~HCM650-FC-240~~	~~HCM650 SOCKET CONTACT, CRIMP, 240mm2, COPPER WIHT SILVER PLATING, WITH HEAT-SHRINKABLE INSULATION TUBING~~ HCM650 母针，冷压，240mm2，铜镀银，带热缩绝缘套管	-	-	-	240	46	~~TYPE II~~ 类型 II

THIS DRAWING IS A CONTROLLED DOCUMENT.

DIMENSIONS: mm

TOLERANCES UNLESS OTHERWISE SPECIFIED:
0 PLC ±-
1 PLC ±-
2 PLC ±-
3 PLC ±-
4 PLC ±-
ANGLES ±-

MATERIAL - -

FINISH - -

DWN GINO.YAO 30JAN2018
CHK CHRIS.WANG 30JAN2018
APVD CHRIS.WANG 30JAN2018
PRODUCT SPEC 108-137074
APPLICATION SPEC 114-137074
WEIGHT -

TE Connectivity

NAME HCM650 SOCKET CONTACT

SIZE A2 | CAGE CODE 00779 | DRAWING NO C-T2196502XXX00X | RESTRICTED TO -

CUSTOMER DRAWING | SCALE 1:1 | SHEET 2 OF 2 | REV A1

1471-9 (3/13)