THIS DRAWING IS UNPUBLISHED. RELEASED FOR PUBLICATION 20
© COPYRIGHT 20 BY - ALL RIGHTS RESERVED.

LOC	DIST
AF	50

REVISIONS

P	LTR	DESCRIPTION	DATE	DWN	APVD
	C6	REVISED PER ECR-19-006609	02MAY2019	BDA	DS

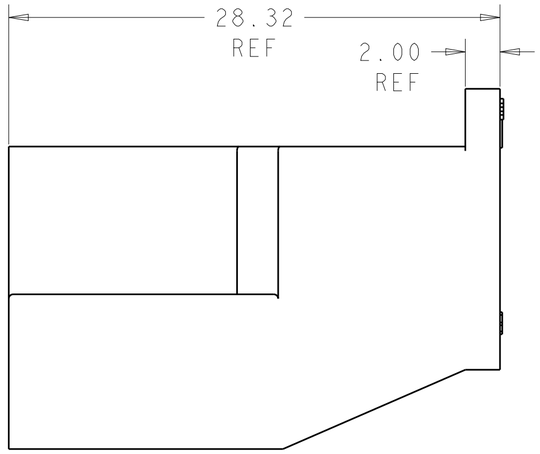

1 ACCEPTS RECEPTACLE CONTACTS 1-160759-1 (20-16) AWG, 154718-3 (18-14) AWG, 154717-3 (14-11) AWG.

2 ~~PREPRODUCTION ONLY - FASR REQUIRED.~~

3 DUE TO LIGHT PIGMENTATION, THE PARTS MAY HAVE SOME COLOR VARIATION/MARBLING.

4 PRELIMINARY- NOT FOR PRODUCTION

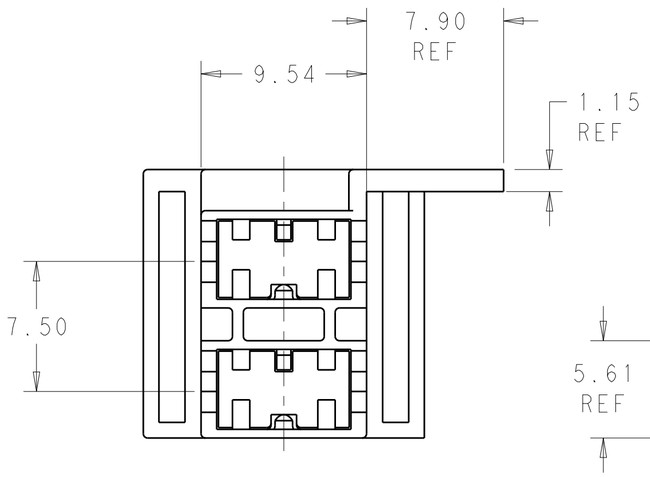

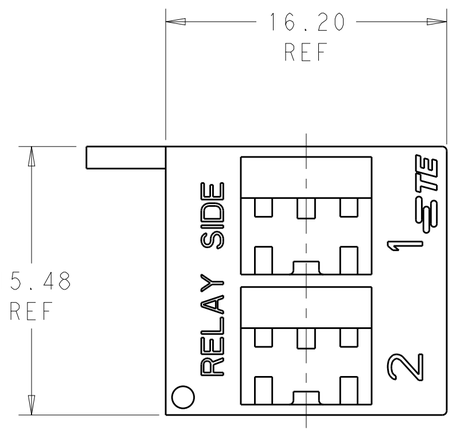

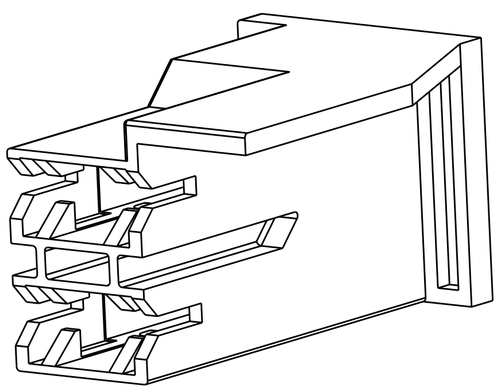

MATERIAL	COLOR	PART NO.
NYLON V0 GWT	BLACK	1-1969717-2
NYLON V0 GWT	NATURAL	1-1969717-1
NYLON V0	BLACK	1969717-6
NYLON V0	NATURAL	1969717-5
NYLON V0	GREEN 3	4 1969717-4
NYLON V0	YELLOW 3	1969717-3

THIS DRAWING IS A CONTROLLED DOCUMENT.

DIMENSIONS: mm

TOLERANCES UNLESS OTHERWISE SPECIFIED:

0 PLC	±-
1 PLC	±-
2 PLC	±0.25
3 PLC	±-
4 PLC	±-
ANGLES	±-

MATERIAL: SEE TABLE

FINISH: SEE TABLE

DWN B WAYNE 15JAN15
CHK DAVE HUMPHREY 15JAN15
APVD DAVE HUMPHREY 15JAN15

PRODUCT SPEC -

APPLICATION SPEC -

WEIGHT -

CUSTOMER DRAWING

TE Connectivity

NAME HOUSING, RECEPTACLE, POSI-LOCK, 2 POSITION, 6.35 SERIES

SIZE	CAGE CODE	DRAWING NO	RESTRICTED TO
A2	00779	C-1969717	-

SCALE 4:1 SHEET 1 OF 1 REV C6

1471-9 (3/11)