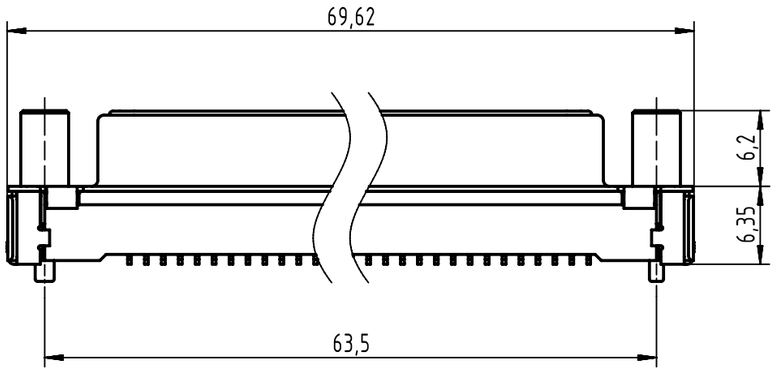

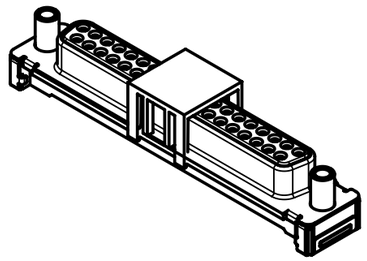

Load vacuum cover

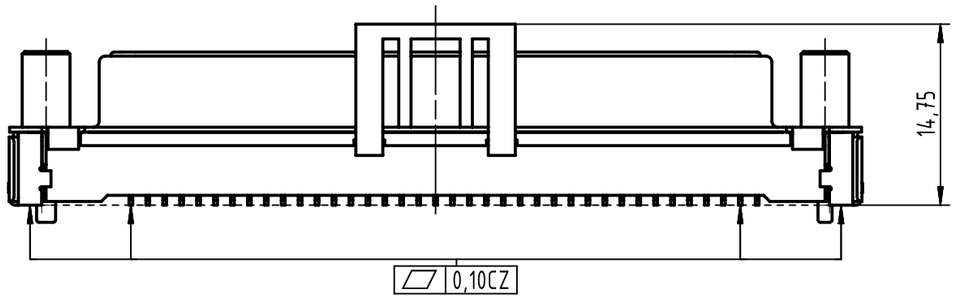

(All contacts and grounds)

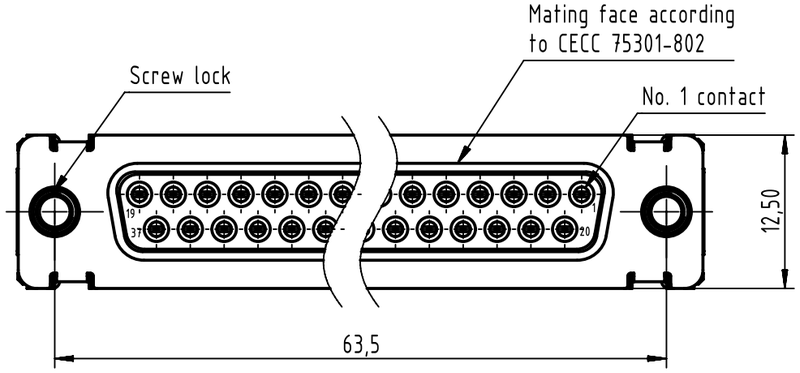

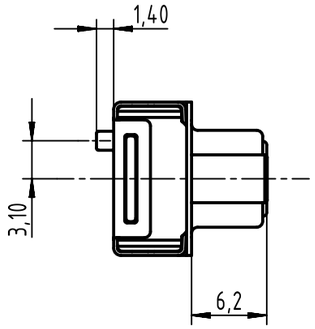

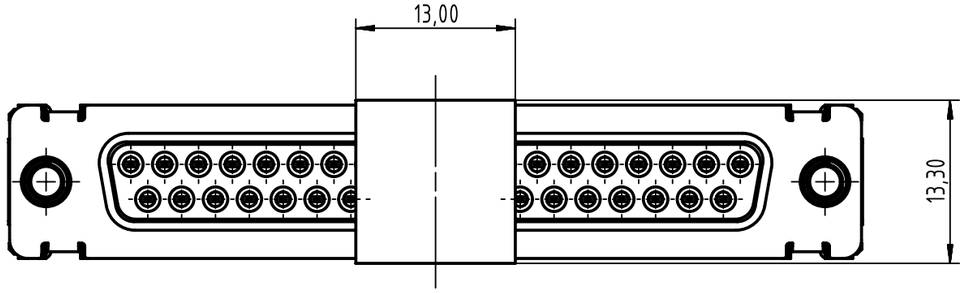

PCB layout, component side

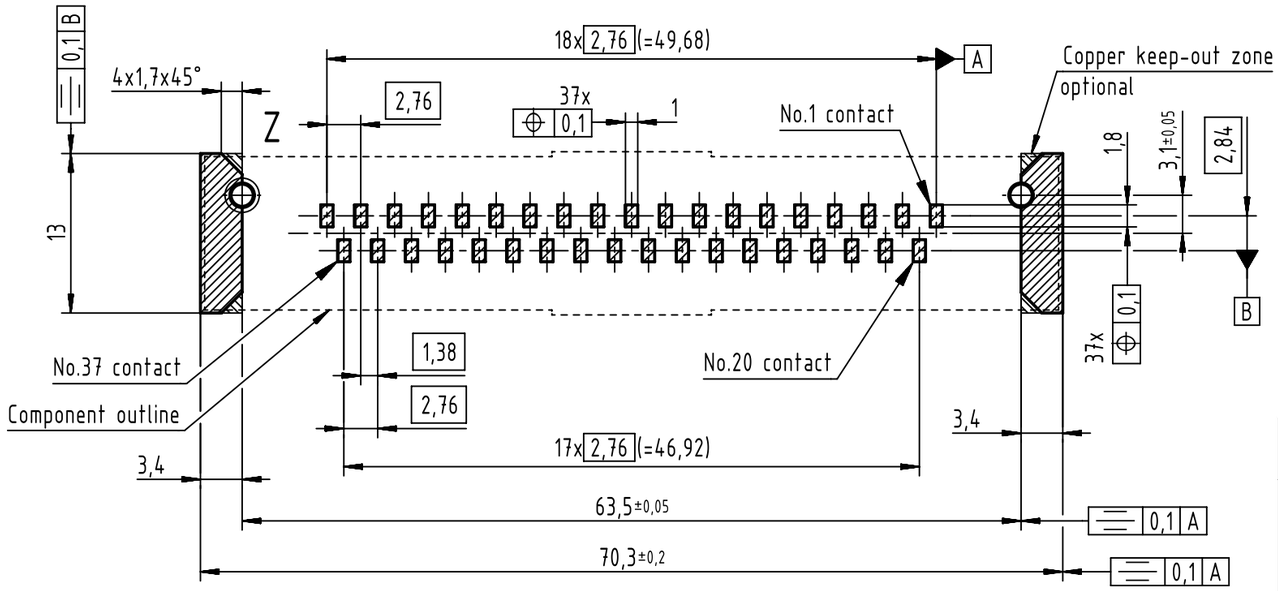

Z (5:1)

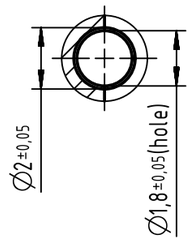

Max. Temperature: 260°C during 10 seconds.
Find further technical information on DS 09550200302.

Part number	PL	Screw lock	Index designation	
0955 415 6622 333	2	4-40 UNC	Black insulator	Samples
0955 415 3622 741	1			Reel packaging (140 connectors)
0955 415 6622 741	2			
0955 415 7622 741	3			
0955 415 3621 741	1	M3		
0955 415 6621 741	2			
0955 415 7621 741	3			

All Dimensions in mm
Original Size DIN A3

Scale 2:1 | Free size tol. | Ref. | Sub.

All rights reserved

Department EL PD

HARTING Electronics GmbH
D-32339 Espelkamp

Created by	Inspected by	Standardisation	Date	State
ZHUANGJ	LUOK	HOFFMANN	2018-11-29	Final Release

Title: D-Sub straight SMT 37-pole fem ass with screw lock and pad

Doc-Key / ECM-Nr.: 100236616/UGD/001/C 500000139800

Type: TB | Number: 0955415X62X | Rev.: C | Page: 1/1

A3