SIGN	DATE	DESCRIPTION	APPROVER
1			

THIS IS CAD DRAWING, DO NOT REVISE MANUALLY!!!

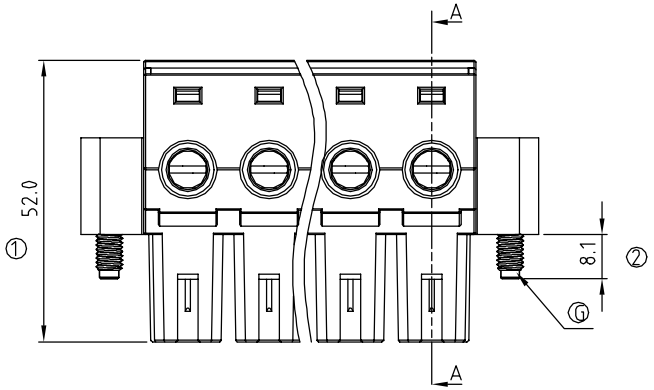

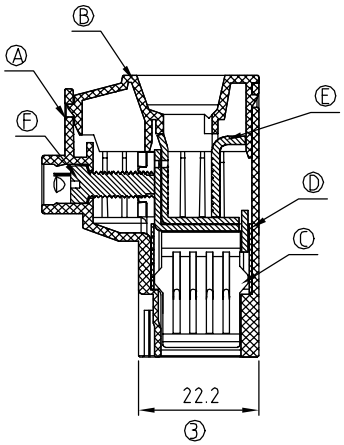

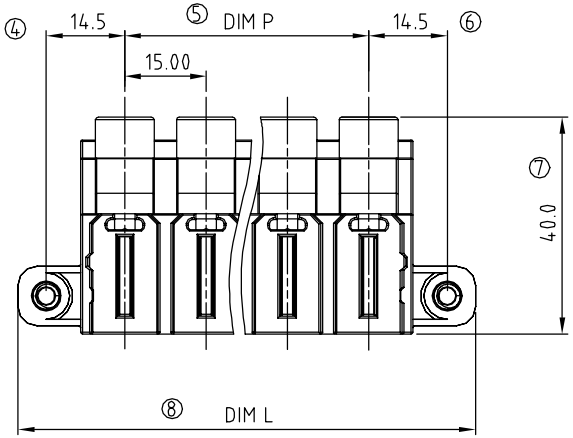

Material:

- Item Ⓐ Terminal housing: Thermoplastic (UL94V-0)
- Item Ⓑ Terminal cover: Thermoplastic (UL94V-0)
- Item Ⓒ Female contact : Copper. Tin plated
- Item Ⓓ Wire guard : Stainless Steel
- Item Ⓔ Clamp : Steel Stamping , Zinc plated
- Item Ⓕ Terminal screw: Zinc plating"-"slot type,M5
- Item Ⓖ With flange screw: Zinc plating"*"slot type,M5

Electrical:	cULus
Voltage rating:	600 V
Current rating:	115 A
Wire range:	
Solid wire(AWG):	2-20
Stranded wire(AWG):	2-20
Torque(Lb-In):	36.5
Screw:	M5
Wire strip length:	19-20mm
Withstanding Voltage:	2.2 KV
Operating temperature:	-40°C to +115°C
APPROVAL:	

KX xx C 1 x 1 xxxx G

No. OF POLES
02: 2 POLES
03: 3 POLES
:
10: 10 POLES

COLOR
0: BLACK
5: GREEN (RAL 6018/T)
6: BLUE
8: GREY (RAL 7035/D)

G: Pb<40000ppm

0000: "@" Logo (Standard)
000A: "ANYTEK" Mark
Any special item by customer requst. please contact sales department.

POLE	2	3	4	5	6	7	8	9	10
Dim.L	54.4	69.4	84.4	99.4	114.4	129.4	144.4	159.4	174.4
Dim.P	15.0	30.0	45.0	60.0	75.0	90.0	105.0	120.0	135.0
Tol.	±0.20			±0.35			±0.50		

ANYTEK

CUSTOMER COPY

ALL RIGHTS RESERVED. REPRODUCTION OR ISSUE TO THIRD PARTIES IN ANY FORM WHATEVER IS NOT PERMITTED WITHOUT WRITTEN AUTHORITY FROM THE PROPRIETOR. PROPERTY OF ANYTEK TECHNOLOGY CO., LTD

TITLE	KX 15.0mm Series (with flange) 2P-10P				
PART NO.	KXxxC1x1xxxxG			DWG NO.	8KX0004
APPROVED	CHECKED	DESIGNED	DRAWN	CUST NO.	
		Runner 2011.04.25	Runner 2010.05.24	UNIT: mm / SCALE: NONE / SHEET: 01/01 / REV.: B	

Tolerance	
X.	±0.50
X.X	±0.30
X.XX	±0.10
X°	±1°