SIGN	DATE	DESCRIPTION	APPROVER
1	08/04'06	Current rating is changed from 10A to 20A	Marvin
2	08/04'06	Solid wire(AWG) standard is changed from 12-30 to 12-22	Marvin
3	08/04'06	Stranded wire(AWG) standard is changed from 12-30 to 12-22	Marvin
4	08/04'06	Torque standard is changed from 5 Lb-In to 4 Lb-In	Marvin
5	6/03'08	Operating temperature is changed	Marvin
6	6/03'08	Dimension is changed from 2.54 to 2.64	Marvin
7	2010.04.01	Add the 2p mark	Jacke
THIS IS CAD DRAWING, DO NOT REVISE MANUALLY!!!			

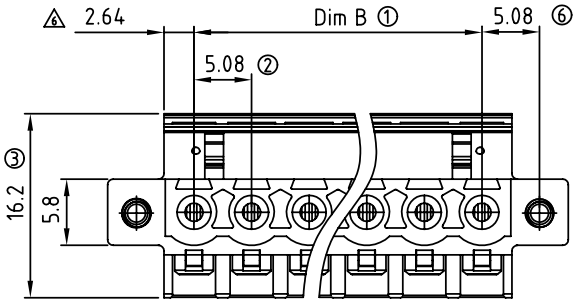

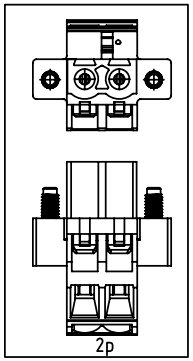

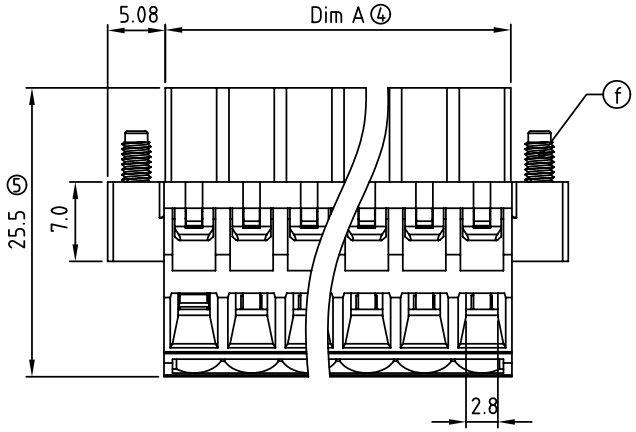

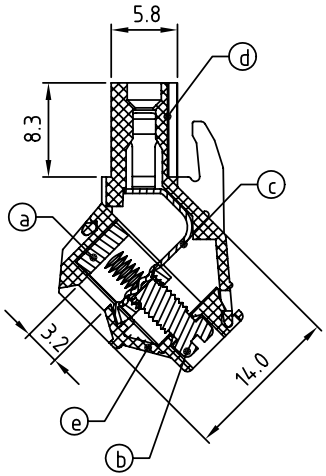

Material

- Item ⓐ Clamp: Brass(CuZn) Ni plated
- Item ⓑ Terminal screw: Steel Zinc plating "-" slot type
- Item ⓒ Female contact: PhBz ,Tin plated
- Item ⓓ Terminal (up body): Thermoplastic (UL94V-0)
- Item ⓔ Terminal (down body): Thermoplastic (UL94V-0)
- Item ⓕ Flange screw: Steel Zinc plating "+/-" slot type

Electrical cULus

- Voltage rating: 300VAC
- 1 Current rating: 20A
- Wire range:
- 2 Solid wire(AWG): 12-22
- 3 Stranded wire(AWG): 12-22
- 4 Torque: 4 Lb-In
- Screw: M3
- Wire strip length: 7-8mm
- Withstanding Voltage: 1.6KV
- 5 Operating temperature: -40°C to +115°C
- Safey Approval: c UL us

EM xx 51 x 2 xxxx G

02	2 CONTACTS
03	3 CONTACTS
...	...
24	24 CONTACTS

Color

0	Black (RAL9005)
2	Red (RAL3001/D)
3	Orange(RAL2011/P)
4	Yellow(RAL1018/A)
5	Green(RAL6018/T)
6	Blue (RAL5015/A)
8	Grey(RAL7035/D)

0000: "@" Logo
000A: "ANYTEK" Mark
Any special item by customer requst. please contact sales department.

RoHS
Pb<40,000ppm

DimA=N×5.08
DimB=(N-1)×5.08
N=NUMBER OF CONTACTS

POLES	TOL
2p-6p	+0.10/-0.10
7p-12p	+0.20/-0.20
13p-18p	+0.30/-0.30
19p-24p	+0.40/-0.40

ANYTEK

CUSTOMER COPY

ALL RIGHTS RESERVED. REPRODUCTION OR ISSUE TO THIRD PARTIES IN ANY FORM WHATEVER IS NOT PERMITTED WITHOUT WRITTEN AUTHORITY FROM THE PROPRIETOR. PROPERTY OF ANYTEK TECHNOLOGY CO., LTD

TITLE	EM-5.08 Series with flange				
PART NO.	EMxx51x2xxxxG			DWG NO.	8EM0002
APPROVED	CHECKED	DESIGNED	DRAWN	CUST NO.	
		Jacke 2010.04.01	Jacke 2010.04.01	UNIT: mm / SCALE: NONE / SHEET: 01/01 / REV.: E	

Tolerance	
X.	±0.50
X.X	±0.30
X.XX	±0.10
X°	±1°