| PART NO. AND CH. CODE | ②$L_4$ | $H_1$ | $H_2$ | $W_1$ | $R_1$ | $W_2$ | $R_2$ | WIRE SIZE (mm²) |
|---|---|---|---|---|---|---|---|---|
| 7114-4110-02, Ⓐ | 13.00 | ③(2.45) | ③(3.55) | 2.30 | 0.45 | 2.80 | 0.45 | ④0.3~0.6 OR EQUIVALENT |
| 7114-4111-02, Ⓐ | 13.00 | ③(3.25) | ③(4.45) | 3.00 | 0.65 | 3.60 | 0.65 | ④0.75~1.25 OR EQUIVALENT |
| 7114-4112-02, Ⓐ | 13.00 | ③(4.00) | ③(5.50) | 3.70 | 0.85 | 4.60 | 0.90 | 1.5 ~2.5 OR EQUIVALENT |
| ②7114-4113-02, Ⓐ | 18.50 | (5.40) | (7.05) | 4.90 | 1.50 | 6.50 | 1.50 | 3.0 ~5.0 OR EQUIVALENT |

注 記

1. 嵌合相手品番：7116-4110-02 ETC.
③2. 7114-4113-02においての通電電流値は、2.5 mm²電線相当以下とする。
③3. 7114-4113-02に5 mm²電線を圧着して使用する場合には、専用ハウジングが必要となります。

NOTES

1. MATING PART NO. :7116-4110-02 ETC.
③2. CURRENT FOR 7114-4113-02 SHALL BE THE CURRENT FOR 2.5 mm² WIRE OR UNDER.
③3. IN CASE 5 mm² WIRE IS CRIMPED WITH THE TERMINAL 7114-4113-02, SPECIAL HOUSING IS REQUIRED.

APPLICABLE WIRE SIZE MARK

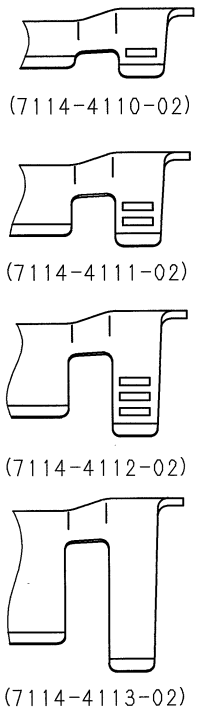


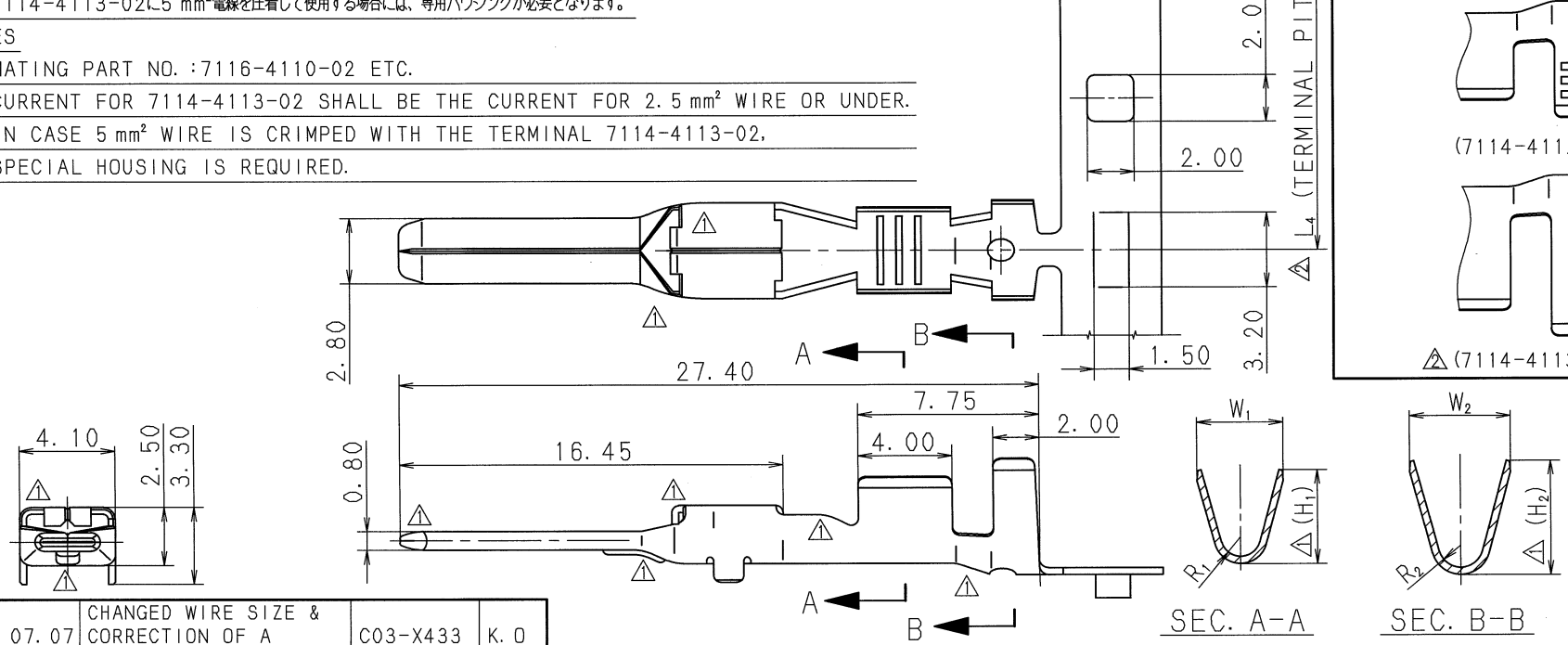


| LET | DATE | REVISION RECORD | NO. | CHKD |
|---|---|---|---|---|
| ④ | 03.07.07 | CHANGED WIRE SIZE & CORRECTION OF A CLERICAL ERROR | C03-X433 | K.O |
| ③ | 99.10.11 | ADDED NOTE ETC. | C99-7133 | T.S |
| ② | 99.02.17 | ADDED PART NO. ETC. | C99-L408 | Y.U |
| ① | 97.07.25 | CHANGED FORM, Ⓐ | C97-M151 | H.K |
| — | 95.07.25 | NEW | C95-M193 | Y.U |

GENERAL TOLERANCE

| | 10MAX | 50MAX | 100MAX | 250MAX | 2500VR | ANGLE | ECCENT |
|---|---|---|---|---|---|---|---|
| A | ±0.15 | ±0.2 | ±0.3 | ±0.5 | ±0.75 | ±30′ | 0.1 |
| B | ±0.2 | ±0.3 | ±0.55 | ±0.95 | ±1.4 | ±30′ | 0.1 |
| Ⓒ | ±0.3 | ±0.5 | ±0.8 | ±1.4 | ±2 | ±30′ | 0.15 |

SPECIFIED

MASS g

ISSUE MARK

CUSTOMER

CUSTOMER PART NO. | CUSTOMER DWG NO.

OFFICE | TRIAL PART NO.

VENDOR

VENDOR NO.

| DWG TYPE | DWG SOURCE | DWG DATE | UNIT | SCL | ANGLE |
|---|---|---|---|---|---|
| R | NEW | 95.07.25 | mm | ④5/1 | 3 |

| APPROVED | CHECKED | CHECKED | DESIGN | DRAWN |
|---|---|---|---|---|
| 外之内 | 土山 | 内牟禰 | Y. UCHIDA | Y. OHKUBO 原 |
| '03.8.20 | '03.8.20 | '03.8.19 | 95.05.31 | 03.07.07 |

MATL. SPEC. COPPER ALLOY t=0.3 (TIN PLITING) | TREAT. & FIN.

NAME ②2.8 SYSTEM CONNECTOR MALE TERMINAL

PART NO. CH. CODE 7114-4110-02 ETC.

DWG NO. 7114-4110-02:R | SET DWG NO.

YAZAKI CORPORATION