THIS COPY IS PROVIDED ON A RESTRICTED BASIS AND IS NOT TO BE USED IN ANY WAY DETRIMENTAL TO THE INTERESTS OF PANDUIT CORP.

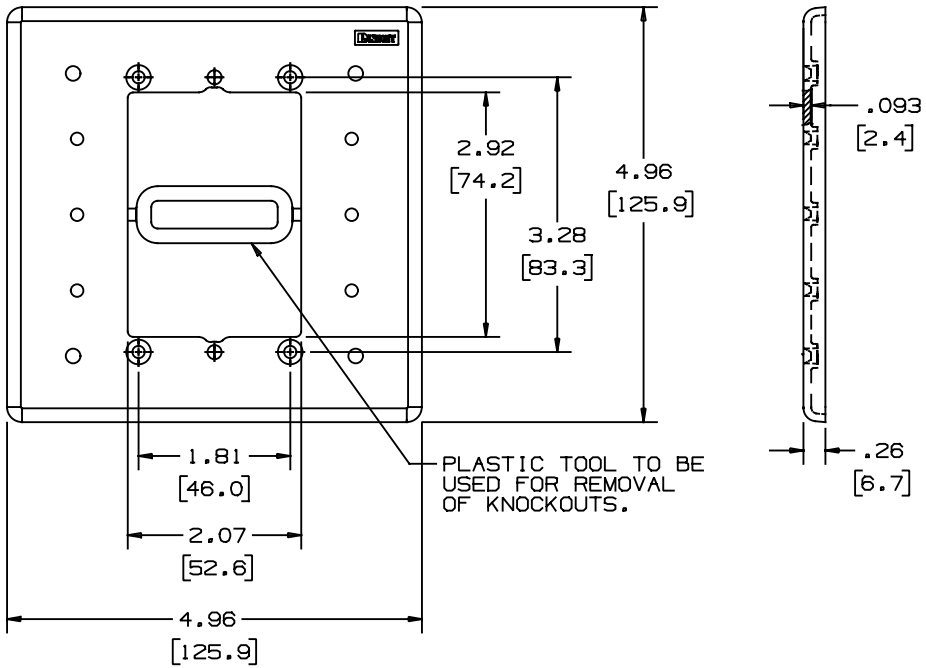

PANDUIT PART NO. *	WEIGHT
MIWBA	8.6 LB/100 PCS (3909 g/100 PCS)

NOTES:

* 1. SEE CURRENT CATALOG FOR ADDITIONAL PART NUMBER SUFFIXES TO INDICATE COLOR AND OR PACKAGE QUANTITY.

2. SEE CURRENT CATALOG FOR VARIOUS MOUNTING APPLICATIONS.

A 3. THE FOLLOWING SCREWS ARE PROVIDED:
   a. FOUR (4) #6-32 X 1" SLOTTED PAN HEAD MACHINE SCREWS.(*PAINTED)
   b. TWO (2) #8-32 X 1" SLOTTED PAN HEAD MACHINE SCREWS.(*PAINTED)
   c. TWO (2) #6-20 X 1/2" SLOTTED PAN HEAD TYPE B SHEET METAL SCREWS. (SELF-TAPPING SCREW)(*PAINTED)
   d. TWO (2) #6-20 X 1/4" SLOTTED PAN HEAD TYPE B SHEET METAL SCREWS. (SELF-TAPPING SCREW)(NOT PAINTED)

   (*SCREWS ARE PAINTED TO MATCH ADAPTER COLOR.)

4. DIMENSIONS IN PARENTHESES ARE IN METRIC.

DPC 34304 MIWBA C (D)

CAD FILENAME/LAYERS

PANDUIT CORP. TINLEY PARK, ILLINOIS

IN-WALL BOX ADAPTER
(MIWBA)
CUSTOMER DRAWING

UNLESS OTHERWISE SPECIFIED, DIMENSIONAL TOLERANCES ARE:
(.X) ± (.XXX) ± .010(.3)
(.XX) ± .03(.8) ANGLES ±

UNLESS OTHERWISE SPECIFIED, ALL DIMENSIONS ARE GIVEN IN INCHES, THIRD ANGLE PROJECTION.

DRAWN BY: DW
DATE: 5-19-92
CHECKED BY: JF
MAT'L: ABS (UL 94V-0)
SCALE: NONE
DRAWING NO.: 34304-1
DWG SIZE: A

REV	DATE	BY	CHK	DESCRIPTION	ECN	CHK	CUST	SUP
1	2/22/93	DW		A. ADDED SCREW REFERENCE NOTE 3.	34304-1			
R	6-8-92	DW	CEF	RELEASED TO PRODUCTION	34304-1			