DESCRIPTION: M8 FEMALE // CABLE MOUNT // SOLDER CUP // 3P

SPECIFICATIONS:

MATERIALS:

HOUSING:	PBT, UL94 V-0, BLACK
CONTACTS:	GOLD PLATED BRASS
NUT:	SEE P/N KEY BELOW
GROUND:	BRIGHT TIN PLATED BRASS
ORING:	NBR

ELECTRICAL:

RATED CURRENT:	3A
RATED VOLTAGE:	60V
INSULATION RESISTANCE:	100 MOhms MIN.
CONTACT RESISTANCE:	10 mOhms MAX.

ENVIRONMENT:

OPERATING TEMPERATURE:	-40°C TO +85°C
WATER PROOF:	IP67
WIRE AWG:	24 AWG

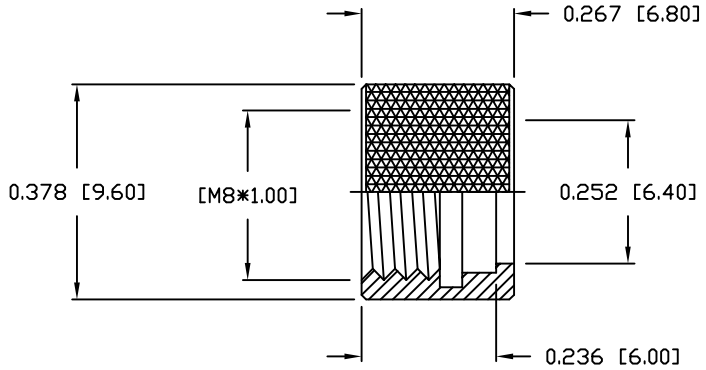

NUT

854-003-20YRLSY

3 = NICKEL PLATED BRASS NUT
T = STAINLESS STEEL NUT

1 = GOLD FLASH
4 = 10μ" GOLD PLATING

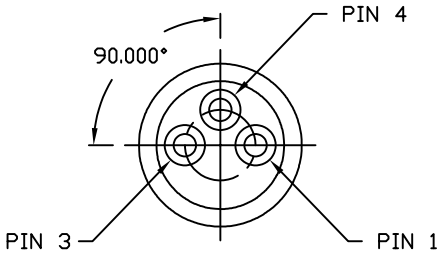

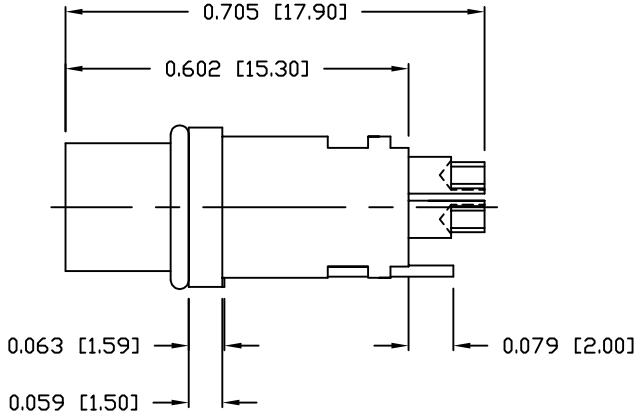

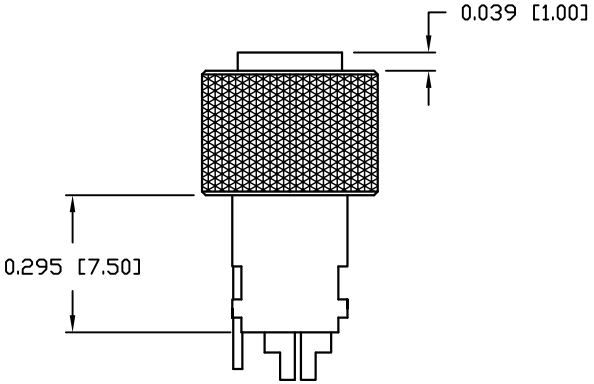

RoHS COMPLIANT

UNITS = inch [mm]

DO NOT SCALE FROM DRAWING

THESE DRAWINGS AND SPECIFICATIONS ARE THE PROPERTY OF NorComp AND SHALL NOT BE REPRODUCED, COPIED OR USED AS THE BASIS FOR THE MANUFACTURE OR SALE OF APPARATUS WITHOUT WRITTEN PERMISSION.

DRAWN: M. SIGMON	NorComp	SCALE: NTS	SHEET 1 OF 1	REV 7
DATE: 03/04/2016		DWG NO. 854-003-20YRLSY	