SIGN	DATE	DESCRIPTION	APPROVER
1	04`20/10	Add the tolerance table	Tason
2	10/19`10	Add the "cUL"	Tason
THIS IS CAD DRAWING, DO NOT REVISE MANUALLY!!!			

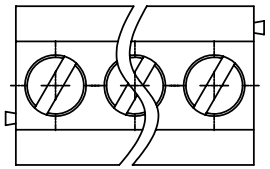

N = Number of poles

Dim A= (N-1) X3.5

Dim B= Nx3.5 1

	Dim A	Dim B
2P	±0.10	±0.10
3-6p	±0.15	±0.15
7-12p	±0.20	±0.20
13-18p	±0.30	±0.30
19-24p	±0.40	±0.40

Material

- Item 1 Terminal body(metal housing): Brass(CuZn),Tin plated
- Item 2 Terminal screw: Steel Zinc plating "-" slot type
- Item 3 Wire guard: Stainless steel
- Item 4 Insulator (housing): Thermoplastic (UL94V-0)

Electrical UL/CUL 2

- Voltage rating: 125VAC/125V
- Current rating: 10A/10A
- Wire range:
- Solid wire(AWG): 16-26/16-26
- Stranded wire(AWG): 16-26/16-16
- Torque(Lb-In): 1.7/1.7
- Screw: M2
- Wire strip length: 5-6mm
- Withstanding Voltage: 1.25KV
- Operating temperature: -40°C to +115°C
- Soldering temperature: 250°C±10°C/5 Sec
- Safety Approval: UL cUL

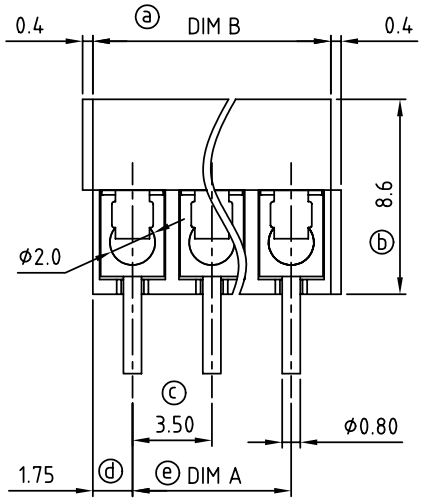

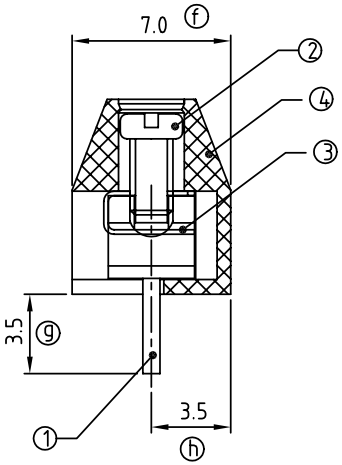

T5 xx 01 x 0 xxxx G

- xx: 02 2 CONTACTS; 03 3 CONTACTS; ... ...; 24 24 CONTACTS
- x: COLOR
  - 0 Black (RAL9005)
  - 5 Green(RAL6018/T)
  - 6 Blue (RAL5015/A)
  - 8 Grey(RAL7035/D)
- xxxx: 0000: "@" Logo; 000A: "ANYTEK" Logo; Any special item by customer requst. please contact sales department.
- G: RoHS Pb<40,000ppm

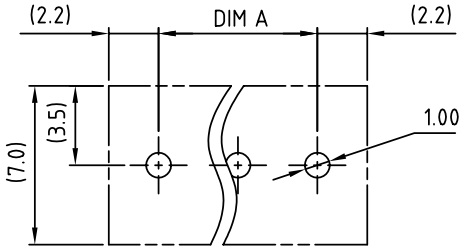

P.C.B. LAYOUT

ANYTEK

CUSTOMER COPY

ALL RIGHTS RESERVED. REPRODUCTION OR ISSUE TO THIRD PARTIES IN ANY FORM WHATEVER IS NOT PERMITTED WITHOUT WRITTEN AUTHORITY FROM THE PROPRIETOR. PROPERTY OF ANYTEK TECHNOLOGY CO., LTD

TITLE	T5-3.5mm Series				
PART NO.	T5xx01x0xxxxG			DWG NO.	8T50001
APPROVED	CHECKED	DESIGNED	DRAWN	CUST NO.	
		Tason 2010.10.19	Tason 2010.04.20	UNIT: mm / SCALE: NONE / SHEET: 01/01 / REV.: F	

Tolerance	
X.	±0.50
X.X	±0.30
X.XX	±0.10
X°	±1°