SIGN	DATE	DESCRIPTION	APPROVER
1	10/30`12	Change the product number	Chen Bo
2	10/30`12	Change the electrical specification	Chen Bo
3	09/21`13	P.C.B Layout is changed	Chen Bo
4	12/10`13	change the electrical specification	Chen Bo
5	12/10`13	change the product number	Chen Bo

THIS IS CAD DRAWING, DO NOT REVISE MANUALLY!!!

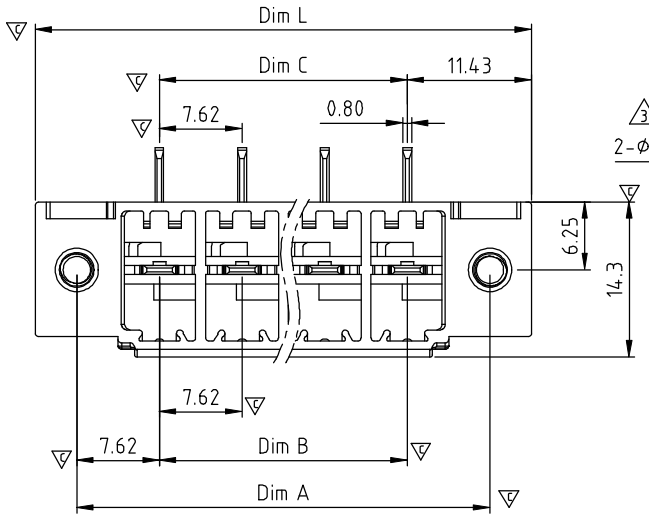

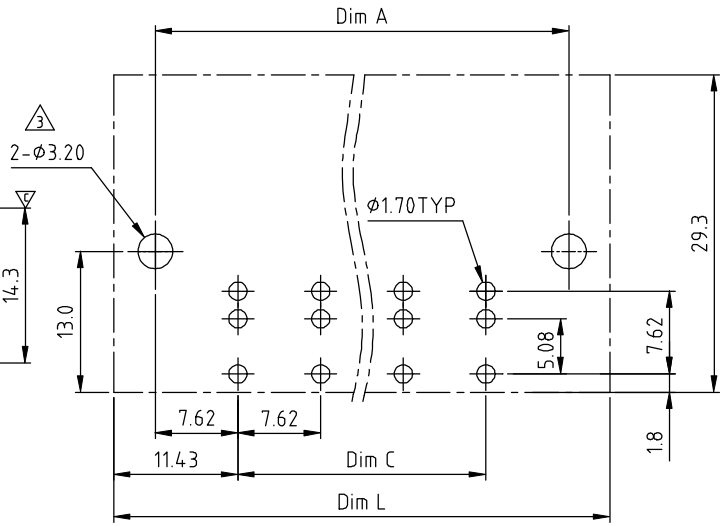

P.C.B Layout

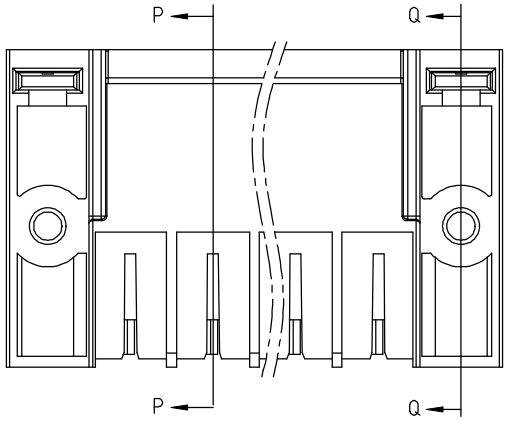

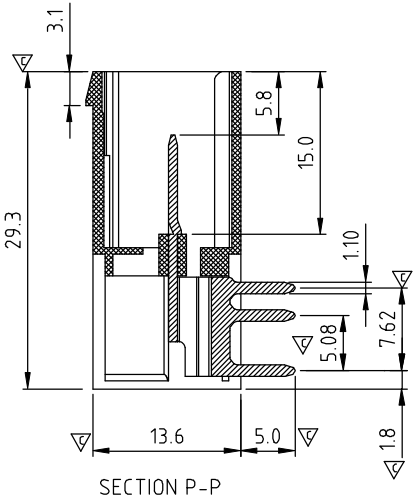

SECTION P-P

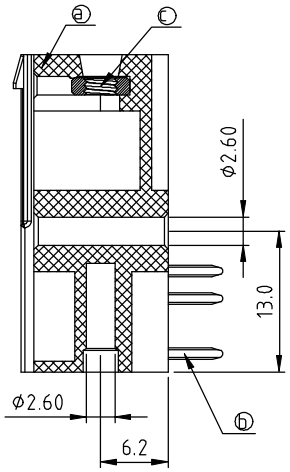

SECTION Q-Q

Material:

- Item ⓐ Terminal(housing):Thermoplastic (UL94V-0)
- Item ⓑ Contact pin: Copper, Tin plated
- Item ⓒ With flange nut : Steel znic plating M3

Electrical:

- Voltage rating:300V
- 4 Current rating:41A
- Withstanding Voltage:1.6 KV
- Operating temperature:-40°C to +115°C
- 2 Soldering temperature:260°C±5°C/5 Sec
- Safeyt Approval: c UL us
- Critical dimension: ▽

5 1 V C xx 0 1 x B xxxx G

No. OF POLES
02: 2 POLES
:
16: 16 POLES

COLOR
0 Black (RAL9005)
2 Red (RAL3001/D)
3 Orange(RAL2011/P)
4 Yellow(RAL1018/A)
5 Green(RAL6018/T)
6 Blue (RAL5015/A)
8 Grey(RAL7035/D)
9 White(RAL1102)
C Green(RAL6018/U)

0000: "@" Logo (Standard)
000A: "ANYTEK" Mark

Any special item by customer requst. please contact sales department.

G RoHS compliant (lead<4%) In copper Alloy

DIMENSION

Dim L	(N-1)×7.62+22.86
Dim A	(N-1)×7.62+15.24
Dim B	(N-1)×7.62
Dim C	(N-1)×7.62

N=Number of contacts

Poles	Tolerance
2p-5p	±0.20
6p-12p	±0.30
13p-16p	±0.40

ANYTEK

CUSTOMER COPY

ALL RIGHTS RESERVED. REPRODUCTION OR ISSUE TO THIRD PARTIES IN ANY FORM WHATEVER IS NOT PERMITTED WITHOUT WRITTEN AUTHORITY FROM THE PROPRIETOR. PROPERTY OF ANYTEK TECHNOLOGY CO., LTD

TITLE	VC 7.62 Series 2P-16P W/flange Right angle Three tail type (PCB UP)				
PART NO.	VCxx01xBxxxxG			DWG NO.	8VC0105
APPROVED	CHECKED	DESIGNED	DRAWN	CUST NO.	
		Chen Bo 12/10`13	Chen Bo 12/10`13	UNIT: mm	
				SCALE: NONE	
				SHEET: 01/01	REV.: E

Tolerance	
X.	±0.50
X.X	±0.30
X.XX	±0.10
X°	±1°