MICRO SWITCH
a Honeywell Division
FED. MFG. CODE 91929

SWITCH – ENCLOSED

CATALOG LISTING
21EN90–R1

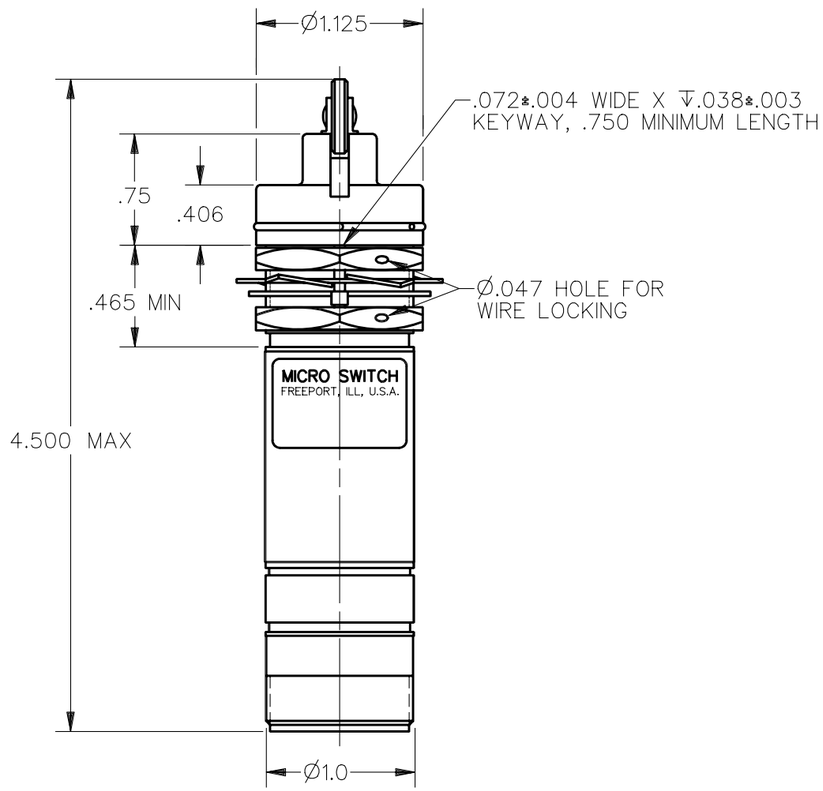

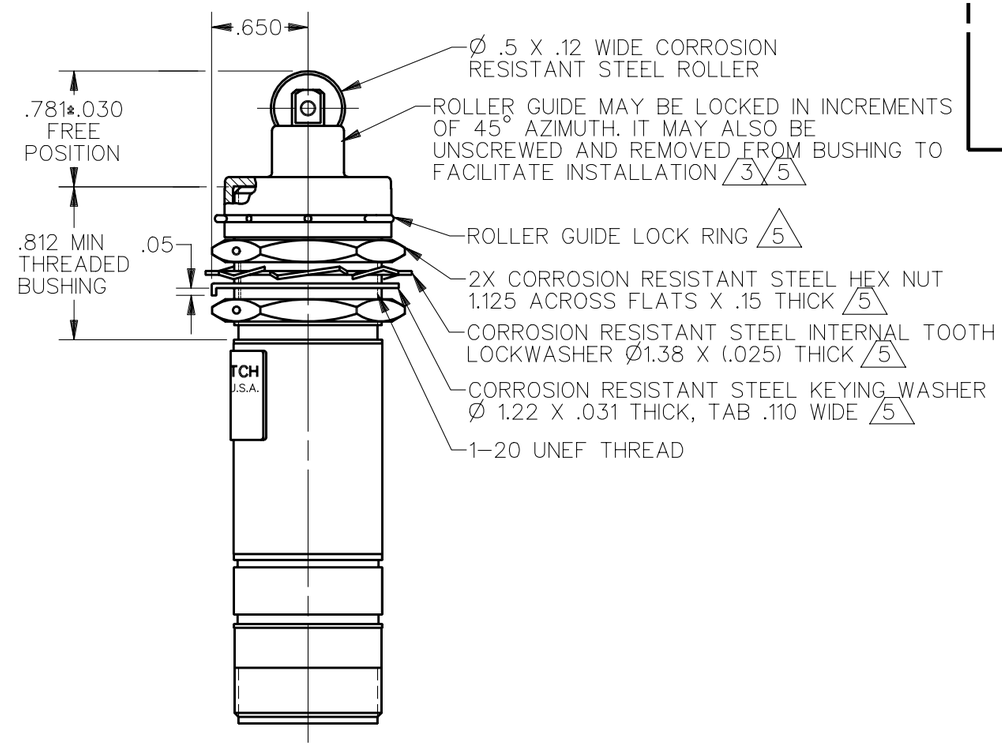

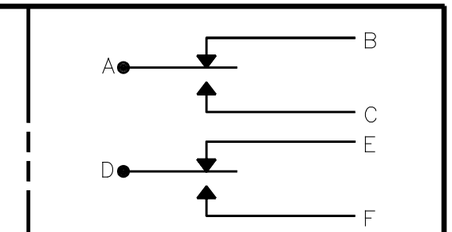

CIRCUIT DIAGRAM

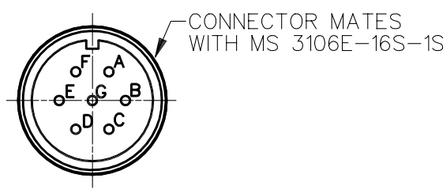

NOTES
1 – ALL EXTERNAL PARTS ARE MADE OF OR TREATED WITH CORROSION RESISTANT MATERIAL
2 – SWITCH SEALED PER MIL–S–8805 SYMBOL 4
3 – TO ADJUST ROLLER DIRECTION, REMOVE ROLLER GUIDE LOCK RING, SCREW ROLLER GUIDE DOWN AS FAR AS POSSIBLE, THEN UNSCREW TO DESIRED DIRECTION. SECURE BY REPLACING ROLLER GUIDE LOCK RING
4 – CIRCUIT DIAGRAM AND CATALOG LISTING ARE SHOWN ON NAMEPLATE
5 – HARDWARE MAY BE PACKAGED UNASSEMBLED PER MIL–S–8805
6 – ENCLOSURE FINISHED WITH GREEN EPOXY BASED ENAMEL COLOR NO.34151 PER FEDERAL STANDARD 595
7 – COINCIDENCE OF OPERATING AND RELEASING POINTS .010 OF PLUNGER TRAVEL
8 – BASIC SWITCHES HAVE GOLD CONTACTS

THIS DRAWING COVERS A PROPRIETARY ITEM AND IS THE PROPERTY OF MICRO SWITCH. A DIVISION OF HONEYWELL. THIS DRAWING IS NOT TO BE COPIED OR USED WITHOUT THE APPROVAL OF MICRO SWITCH

THIRD ANGLE PROJECTION

SCALE FULL

DO NOT SCALE PRINT

CHARACTERISTICS

OPERATING FORCE	6–12 LB
FULL OVERTRAVEL FORCE	30 LB MAX
RELEASE FORCE	4 LB MIN
PRETRAVEL	.040 MAX
DIFFERENTIAL TRAVEL	.020 MAX
OVERTRAVEL	.250 MIN

ELECTRICAL DATA

CONTACT ARRANGEMENT
2X S P D T

LOAD	28 VDC 8	
	SEA LEVEL	50,000 FT.
RES	1 AMP	1 AMP
IND	0.5 AMP	0.5 AMP

UNLESS OTHERWISE SPECIFIED TOLERANCES ARE

ONE PLACE	(.0)	±.030
TWO PLACE	(.00)	±.015
THREE PLACE	(.000)	±.005
ANGLES		±

WEIGHT 8 OZ MAX

ANSI Y14.5M–1982 APPLIES

CATALOG LISTING 21EN90–R1
PAGE 1 OF 1
ISSUE 2 M
REPLACES
RELEASE NO. PR–23464
CHECK
REVISIONS
A PR–23464 J J A 28 APR 98
CHECK
CHECK 28 APR 98 J A F
CHECK 28 APR 98 J J A
DRAWN
DDM/CAD