- Series 510, 511, & 515 PGA sockets are available in three solder tail lengths: standard, long and low profile.
- Choice of three low force clips to cover all applications.
- Hi-Temp PCT polyester insulator material suitable for all forms of soldering.

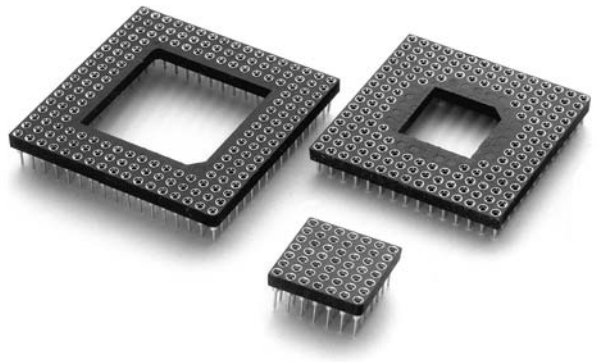

STANDARD SOLDER TAIL SERIES 510

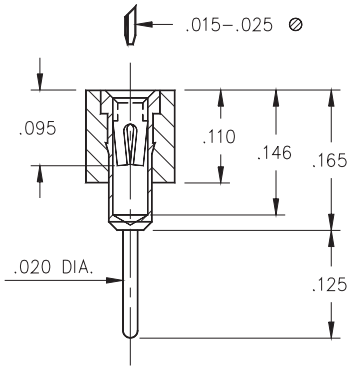

LONG SOLDER TAIL SERIES 511

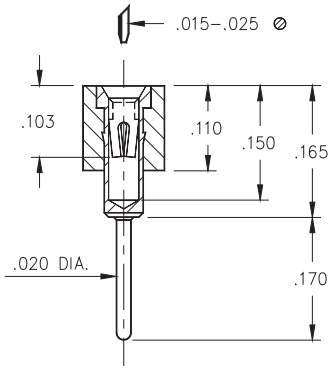

LOW PROFILE SOLDER TAIL SERIES 515

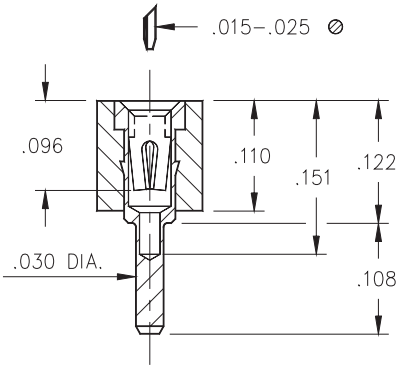

Ordering Information

1. Select pin type for PGA socket at left (standard, long, or low profile) to determine series number.
2. Specify 2-digit plating code from chart at bottom of page
3. Locate footprint pattern from pages 107 to 111, the middle 8 digits of the part number will be located under the pattern.
4. Determine the last 2 digits of part number from the Contact Chart below.

Series — Plating Code — Window — Clip Type

5 1 □ - □ □ - □ □ □ - □ □ - □ □ □ 0 □ □

No. of pins — Grid size — Pattern #

Determined from footprint pattern pages 107 to 111

EXAMPLE OF COMPLETE PART NUMBER:
510-43-068-11-061001

This is a 68 pin (11x11 grid) insulator with a .6" square window and fitted with standard solder tail socket pins. Pins are tin plated, inner contacts are Mill-Max #32 and are plated 30µ" gold.

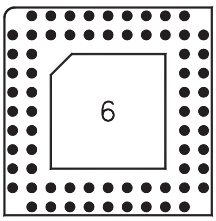

RoHS 2002/95/EC

Clip Type	Contact (Clip) Chart
01	Mill-Max #32 clip, standard low force, recommended for devices with less than 150 pins. See page 208 for details.
02	Mill-Max #35 clip, ultra low force, recommended for devices with more than 150 pins, but less than 250 pins. See page 209 for details.
03	Mill-Max #43 clip, "ultra lite", recommended for devices with more than 250 pins. See page 209 for details.

SPECIFY PLATING CODE XX=	13◇		93	99		43◇	44◇
Sleeve (Pin)	10µ" Au		200µ" Sn/Pb	200µ" Sn/Pb		200µ" Sn	200µ" Sn
Contact (Clip)	30µ" Au		30µ" Au	200µ" Sn/Pb		30µ" Au	200µ" Sn