THIS COPY IS PROVIDED ON A RESTRICTED BASIS AND IS NOT TO BE USED IN ANY WAY DETRIMENTAL TO THE INTERESTS OF PANDUIT CORP.

PANDUIT PART#	DESCRIPTION	WEIGHT*
CJT6X88TG**	8 POSITION, 8 WIRE UNIVERSAL 28/30 AWG CATEGORY 6A JACK MODULE. AQUA WIRE CAP IS COLOR CODED FOR T568A AND T568B WIRING SCHEMES.	1.61 LB/100 PCS (731g/100 PCS)

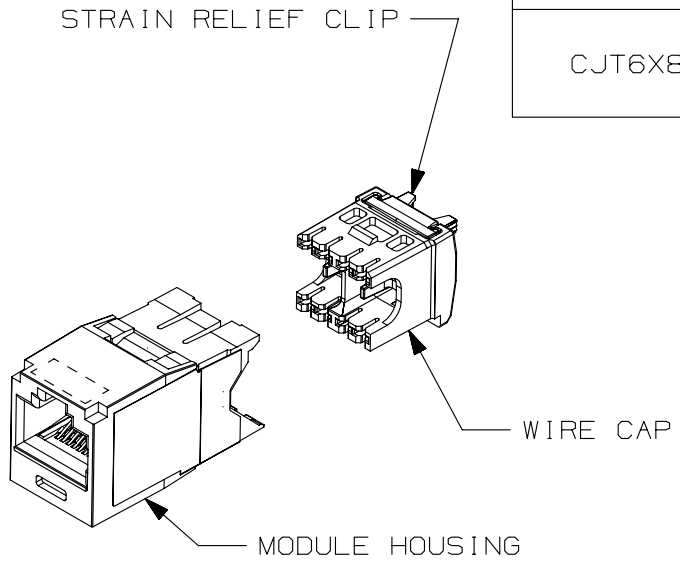

*WEIGHT IS APPROXIMATE
**JACK COLOR SUFFIX

NOTES:
1. AQUA WIRE CAP AND STRAIN RELIEF CLIP DESIGNATE 28/30 AWG, CATEGORY 6A PERFORMANCE.
2. TO DESIGNATE A JACK COLOR, ADD A TWO LETTER COLOR SUFFIX. SEE CURRENT CATALOG FOR AVAILABLE PART NUMBER SUFFIXES.
3. MATERIAL:
   MODULE HOUSING - UL94V-0 ABS
   WIRE CAP - UL94V-0 PC
   STRAIN RELIEF CLIP - UL94V-0 PC
4. ALL CATEGORY 6A 8 POSITION, 8 WIRE CONNECTOR MODULES ARE UNIVERSAL IN DESIGN. THEY ACCEPT SIX AND EIGHT POSITION MODULAR PLUGS WITHOUT DAMAGE.
5. DIMENSIONS IN BRACKETS ARE IN METRIC.

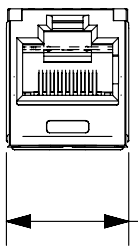

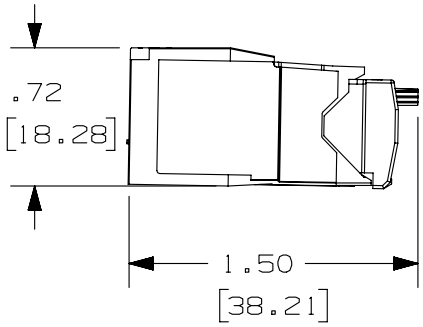

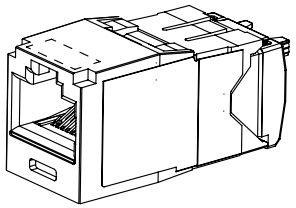

ACTUAL SIZE

REV	DATE	BY	CHK	APR	DESCRIPTION	ECN
R	12-3-14	BJN	JAV	FMS	RELEASED TO PRODUCTION	11M309AC-02

PART NUMBER: CJT6X88TG**

TITLE: TX6A CATEGORY 6A 28/30 AWG JACK MODULE

CUSTOMER DRAWING

ITEM REVISION NAME: 11M309AC/00

DATASET FILE NAME: 11M309AC_DC02/00A

UNLESS OTHERWISE SPECIFIED, DIMENSIONAL TOLERANCES ARE: IN [mm]
.X ± .XXX ± .010 [.3]
.XX ± .03[.8] ANGLES ±
THIRD ANGLE PROJECTION

MATERIAL: SEE NOTE 3

DRAWING NUMBER: 11M309AC-02

DRAWN BY	DATE	CHK	SCALE	SHT 1 OF 1	SIZE
BJN	12-3-14	JAV	FULL		A

D10100DA/14