SIGN	DATE	DESCRIPTION	APPROVER
1	2010.12.20	The design is changed	Chen Bo
2	04/04'11	Add is spec.	Chen Bo
3	07/29'11	The torque is changed & Add is the "cULus" mark	Runner
THIS IS CAD DRAWING, DO NOT REVISE MANUALLY!!!			

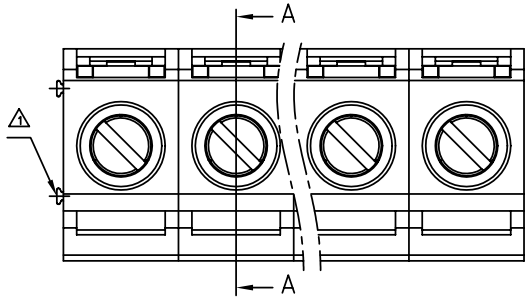

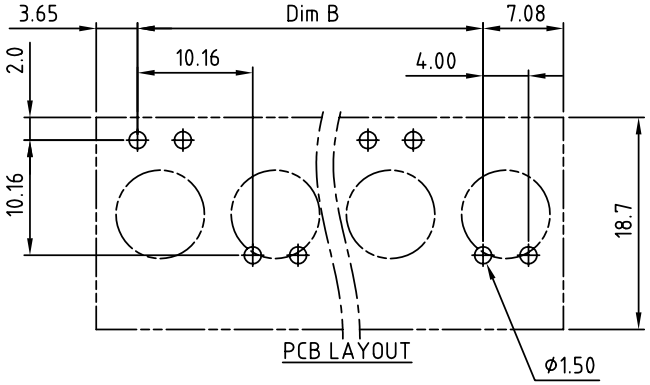

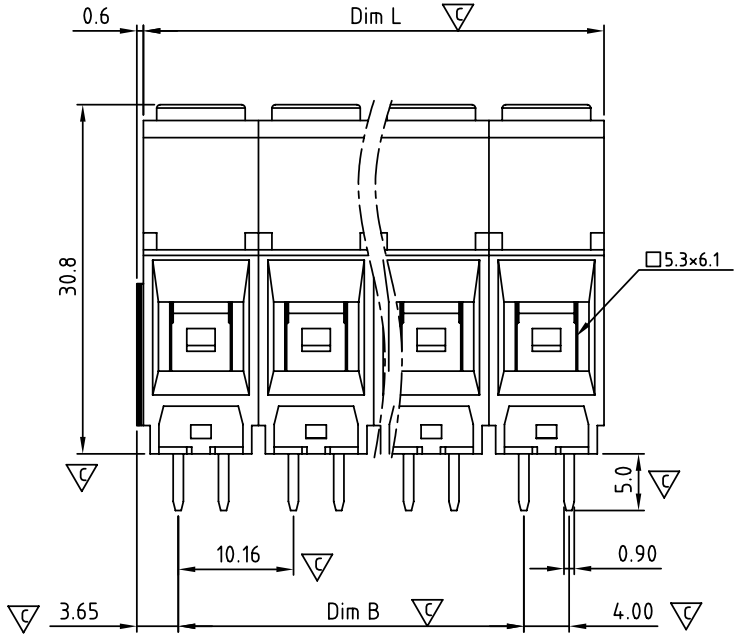

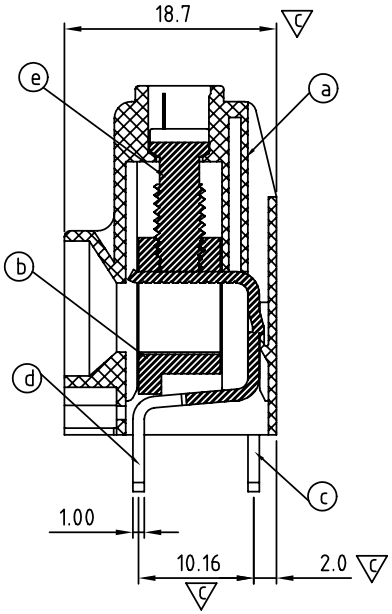

SECTION A-A

Material:

- Item a Terminal housing : Thermoplastic (UL 94V-0)
- Item b Clamp : Brass , Ni plated
- Item c Wire guard solder pin (Back single row) : Copper , Tin plated
- Item d Wire guard soler pin (Front single row) : Copper , Tin plated
- Item e Terminal screw: Steel Zinc plating"-"slot type

Electrical

- Voltage rating : 600V
- Current rating : 65A
- Wire range :
- Solid wire (AWG) : 6-20
- Stranded wire (AWG) : 6-20
- 3 Torque (LB-In.) : 12.2
- Screw : M4.5
- Wire strip length : 10~11mm
- Withstanding voltage : 2.2KV
- Operating temperature : -40°C+115°C
- Soldering temperature : 250°C+10°C/5 Sec
- 3 Critical dimension: c UL us
- Safety Approval:

KP xx 2 1 x 0 xxxx G

- xx: 02 2 Poles; 03 3 Poles; ... ...; 12 12 Poles
- x: Color
  - 0 Black (RAL9005)
  - 2 Red (RAL3001/D)
  - 3 Orange(RAL2011/P)
  - 4 Yellow(RAL1018/A)
  - 5 Green(RAL6018/T)
  - 6 Blue (RAL5015/A)
  - 8 Grey(RAL7035/D)
- xxxx: 0000:"@"Logo (Standard); 000A:"ANYTEK"Logo; Any special item by customer request, please contact sales department.
- G: RoHS Pb<40,000ppm

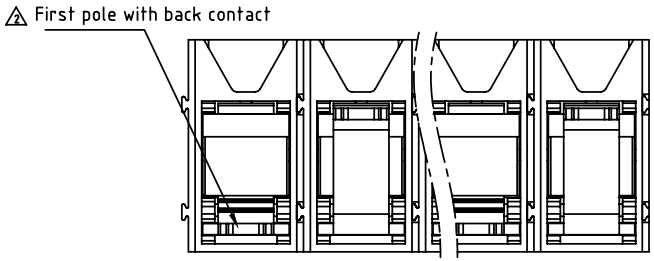

Poles	02	03	04	05	06	07	08	09	10	11	12
Dim L	20.32	30.48	40.64	50.80	60.96	71.12	81.28	91.44	101.60	111.76	121.92
Dim B	10.16	20.32	30.48	40.64	50.80	60.96	71.12	81.28	91.44	101.60	111.76
TOL	±0.20			±0.30				±0.40			

ANYTEK

CUSTOMER COPY

ALL RIGHTS RESERVED. REPRODUCTION OR ISSUE TO THIRD PARTIES IN ANY FORM WHATEVER IS NOT PERMITTED WITHOUT WRITTEN AUTHORITY FROM THE PROPRIETOR. PROPERTY OF ANYTEK TECHNOLOGY CO., LTD

TITLE	KP 10.16 Series Solder pins staggered by half pin spacing (Without cover)				
PART NO.	KPxx21x0xxxxG			DWG NO.	8KP0101
APPROVED	CHECKED	DESIGNED	DRAWN	CUST NO.	
		Runner 2011.07.29	Chen Bo 2011.04.04	UNIT: mm / SCALE: NONE / SHEET: 01/01 / REV.: E	

Tolerance	
X.	±0.50
X.X	±0.30
X.XX	±0.10
X°	±1°