SIGN	DATE	DESCRIPTION	APPROVER
1	12/11`12	Change the dimensional tolerance	Chen Bo
2	09/26`13	add the safety certification icon	Chen Bo
3	09/26`13	change the electrical specification	Chen Bo
THIS IS CAD DRAWING, DO NOT REVISE MANUALLY!!!			

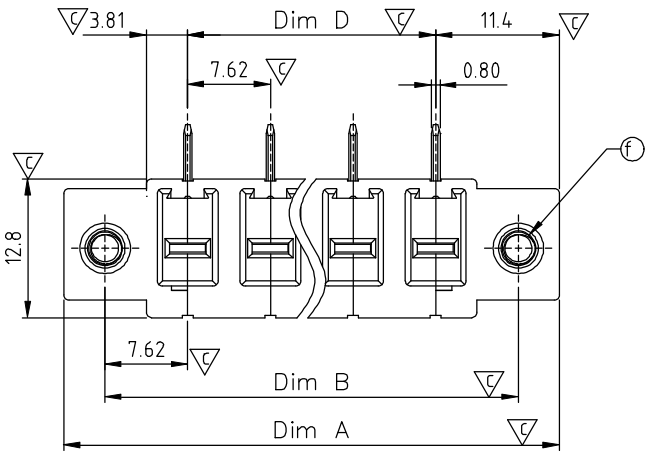

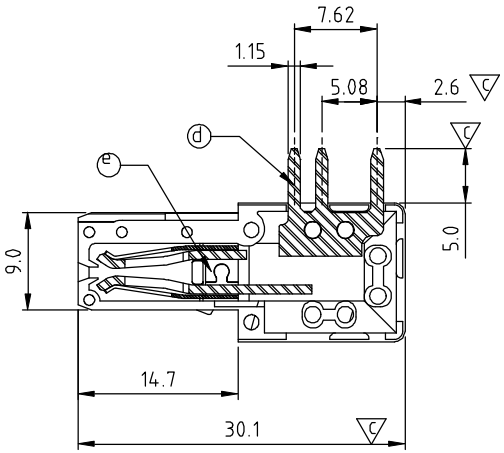

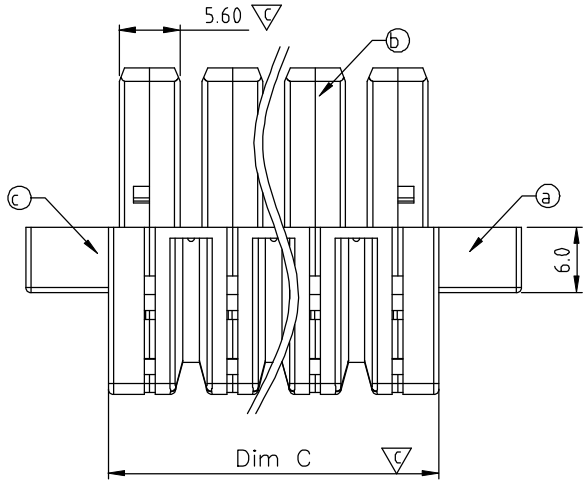

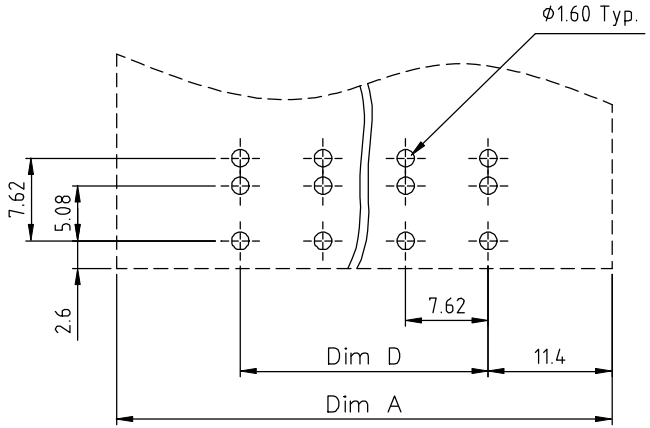

PCB LAYOUT

Material:

- Item ⓐ Left Cover :Thermoplastic (UL94 - V0)
- Item ⓑ Middel Body :Thermoplastic (UL94 - V0)
- Item ⓒ Right Cover :Thermoplastic (UL94 - V0)
- Item ⓓ Contact pin: Copper Tin plated
- Item ⓔ Wire guard:Stainless Steel (ET 7.62)
- Item ⓕ Flange Nut: Steel , Zinc plated M3 (VC 7.62)

Electrical: cULus

3
- Voltage rating: 300V
- Current rating: 41A
- Withstanding Voltage:1.6 KV
- Operating temperature:-40°C to +115°C
- Soldering temperature:260°C±5°C/5 Sec

2
- Safety approval: cULus
- Critical dimension: c

K S xx 0 2 x 1 xxxx G

No. OF POLES
02: 2 POLES
:
16: 16 POLES

COLOR
0 Black (RAL9005)
2 Red (RAL3001/D)
3 Orange(RAL2011/P)
4 Yellow(RAL1018/A)
5 Green(RAL6018/T)
6 Blue (RAL5015/A)
8 Grey(RAL7035/D)
9 White(RAL1102)
C Green(RAL6018/U)

G RoHS compliant (lead<4%) In copper Alloy

0000: "@" Logo (Standard)
000A: "ANYTEK" Mark

Any special item by customer requst. please contact sales department.

N=NUMBER OF POLES 1

DIM		TOL			
		2P--5P	6P--8P	9P--12P	13P--16P
Dim A	(N+2)×7.62	±0.30	±0.35	±0.40	±0.50
Dim B	(N+1)×7.62	±0.30	±0.35	±0.40	±0.50
Dim C	N×7.62	±0.30	±0.35	±0.40	±0.50
Dim D	(N-1)×7.62	±0.30	±0.35	±0.40	±0.50

ANYTEK

CUSTOMER COPY

ALL RIGHTS RESERVED. REPRODUCTION OR ISSUE TO THIRD PARTIES IN ANY FORM WHATEVER IS NOT PERMITTED WITHOUT WRITTEN AUTHORITY FROM THE PROPRIETOR. PROPERTY OF ANYTEK TECHNOLOGY CO., LTD

TITLE	KS 7.62 Series 2P-16P With Flange Right angle (Down)				
PART NO.	KSxx02x1xxxxG			DWG NO.	8KS0004
APPROVED	CHECKED	DESIGNED	DRAWN	CUST NO.	
		Chen Bo 09/26`13	Chen Bo 12/11`12	UNIT: mm	SCALE: NONE
				SHEET: 01/01	REV.: D

Tolerance	
X.	±0.50
X.X	±0.30
X.XX	±0.10
X°	±1°