THIS DRAWING IS UNPUBLISHED. RELEASED FOR PUBLICATION -
© COPYRIGHT copyright_date - ALL RIGHTS RESERVED.

LOC	DIST
GP	00

REVISIONS

P	LTR	DESCRIPTION	DATE	DWN	APVD
	A	RELEASED PER ECO-12-013192	18OCT2012	BMM	MRS

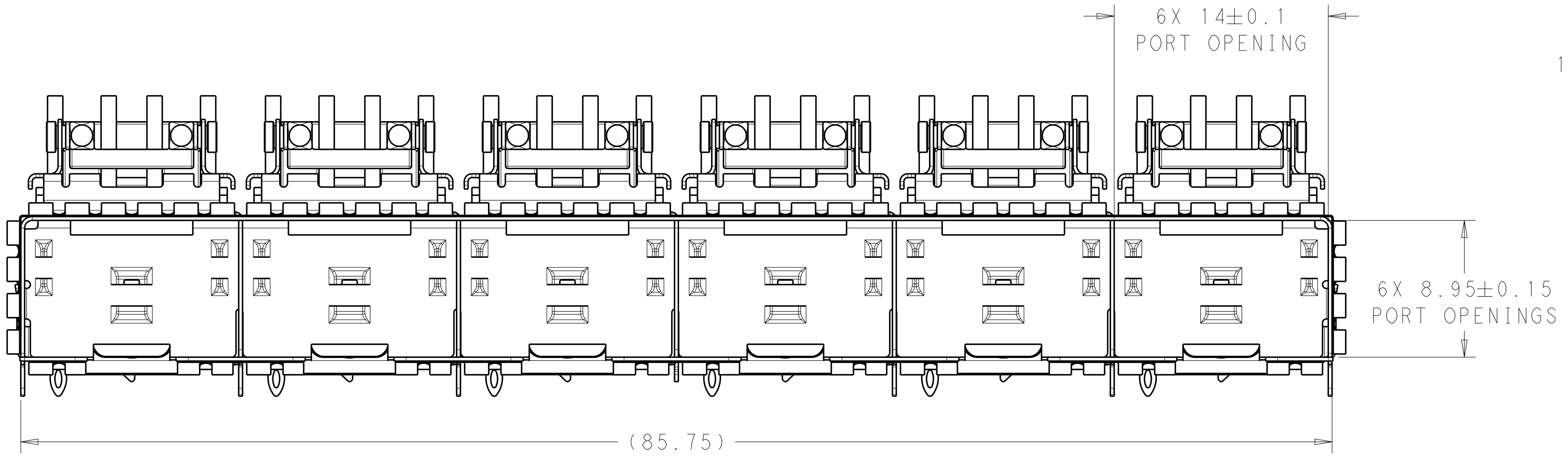

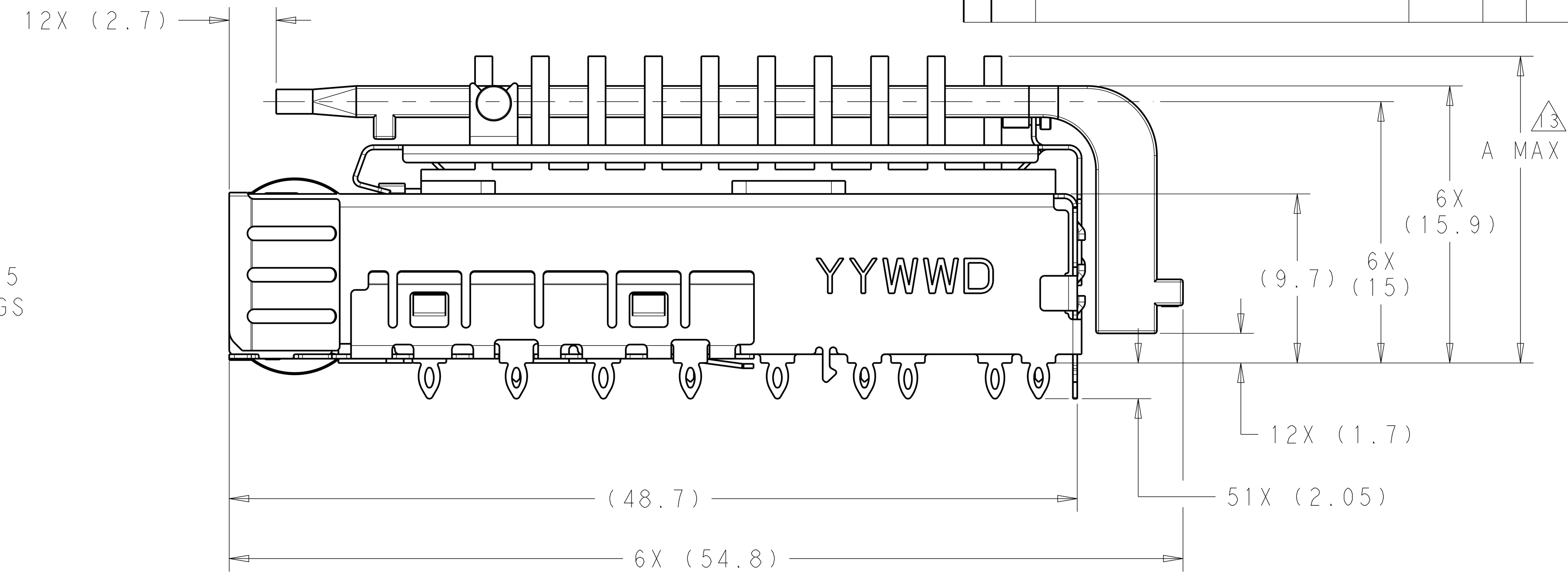

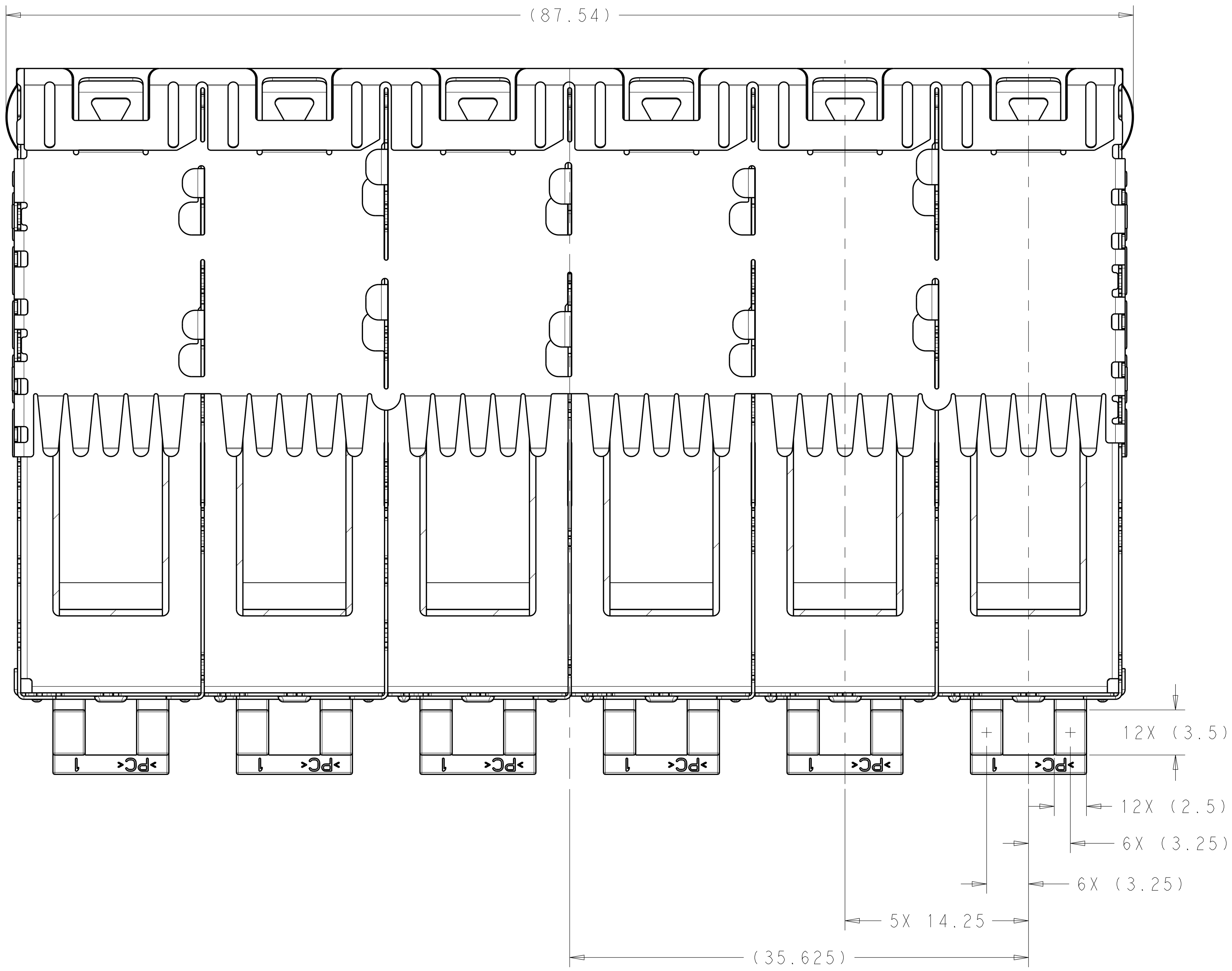

1. MATERIAL:
   CAGE ASSEMBLY: 0.25mm THICK NICKEL SILVER ALLOY.
   HEATSINK/LIGHTPIPE CLIP: STAINLESS STEEL
   LIGHT PIPE: POLYCARBONATE, CLEAR
   HEATSINK: ALUMINUM
2. FINISH:
   SPRINGS: MINIMUM OF 0.8um TIN PLATE OVER A MINIMUM OF 0.8um NICKEL UNDERPLATE.
   NON-PLATED EDGES PERMISSIBLE.
   HEATSINK/LIGHTPIPE CLIP: PASSIVATE
   HEATSINK: ELECTROLESS NICKEL
3. MATES WITH SFP MSA COMPLIANT TRANSCEIVERS.
4. PADS AND VIAS CHASSIS GROUND.
5. INTERPRETATION OF DATUM REFERENCE FRAME IN ACCORDANCE WITH SECT 4.4.1.1 OF ASME Y14.5M-1994.
6. MINIMUM PC BOARD THICKNESS:
   SINGLE SIDED = 1.50mm
   DOUBLE SIDED = 2.25mm
7. HOLE PATTERN REPEATS FOR EACH PORT. SPACING BETWEEN PORTS IS 14.25mm.
8. DATUM AND BASIC DIMENSION ESTABLISHED BY CUSTOMER.
9. REFERENCE APPLICATION SPEC. 114-13120, HOLE A, FOR RECOMMENDED DRILL HOLE DIAMETER AND PLATING THICKNESS.
10. REFERENCE APPLICATION SPEC. 114-13120, HOLE B, FOR RECOMMENDED DRILL HOLE DIAMETER AND PLATING THICKNESS.
11. CERTAIN MATING TRANCEIVERS MAY REQUIRE ADDITIONAL PCB THICKNESS THAT WOULD BE DETERMINED BY THE CUSTOMER.
12. PRODUCT COMPLIES WITH SPECIFICATION SFF-8433 IMPROVED PLUGGABLE FORM FACTOR FOR SFP+ GANGED CAGES.
13. DIMENSION APPLIES PRIOR TO INSERTION OF SFP MODULE
14. HEATSINK, HEATSINK CLIP, AND LIGHTPIPE SHIPPED UNASSEMBLED TO CAGE ASSEMBLY. CAGE ASSEMBLY TO BE PRESSED INTO PCB PRIOR TO ATTACHING HEATSINK, HEATSINK CLIP, AND LIGHTPIPE TO THE CAGE ASSEMBLY.
15. PACKAGED AS A COMPLETE ASSEMBLY.

NOTE	A MAX	APPLICATION	PART NUMBER
15	22.5	NETWORKING, TALL	2198236-4
15	18.1	NETWORKING, SHORT	2198236-3
14	15.5	SAN	2198236-2
14	13.2	PCI	2198236-1

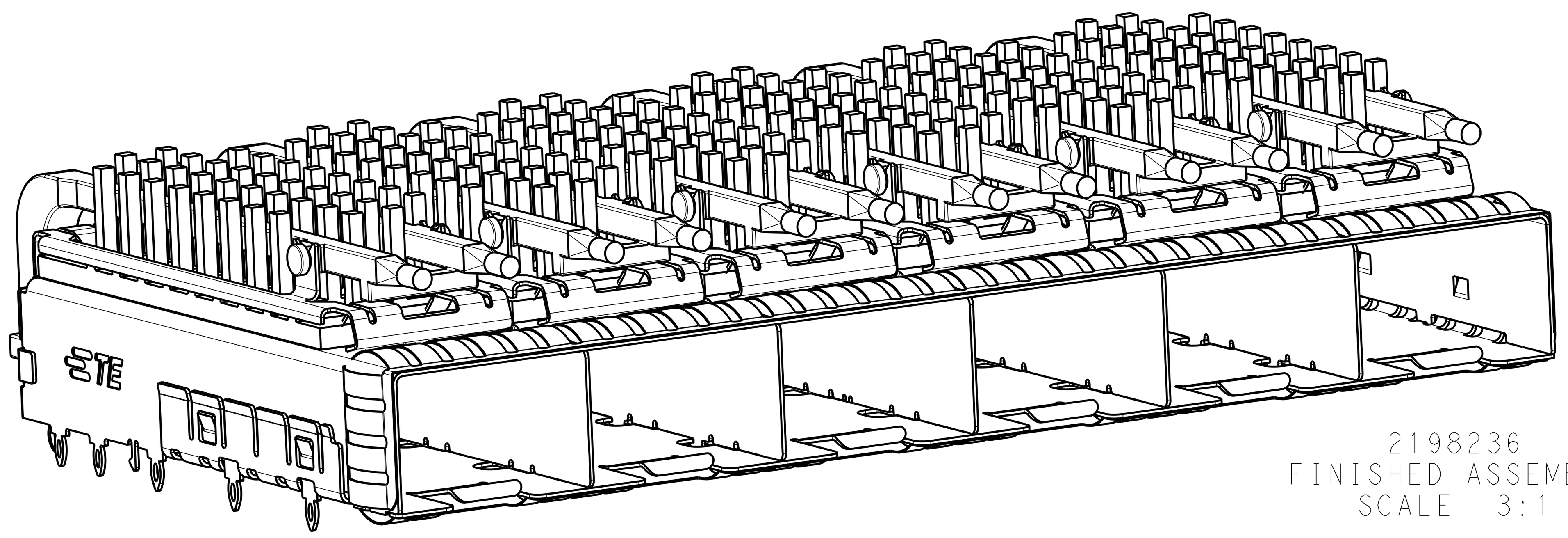

2198236
FINISHED ASSEMBLY
SCALE 3:1

THIS DRAWING IS A CONTROLLED DOCUMENT.

DIMENSIONS:	mm
TOLERANCES UNLESS OTHERWISE SPECIFIED:	0 PLC ±0.1; 1 PLC ±0.1; 2 PLC ±0.1; 3 PLC ±0.1; 4 PLC ±0.1; ANGLES ±1°
MATERIAL	1
FINISH	2
DWN	B. MATTHEWS 15NOV2011
CHK	M. SCHMITT 15NOV2011
APVD	M. SCHMITT 15NOV2011
PRODUCT SPEC	108-2364
APPLICATION SPEC	114-13120
WEIGHT	-
NAME	SFP+ ENHANCED 1X6 CAGE ASSEMBLY, PRESS FIT, EXTERNAL EMI SPRINGS WITH HEATSINK AND LIGHTPIPE
SIZE	A1
CAGE CODE	00779
DRAWING NO	C-2198236
RESTRICTED TO	-
SCALE	4:1
SHEET	1 OF 4
REV	A

TE Connectivity

Customer Drawing

THIS DRAWING IS UNPUBLISHED. RELEASED FOR PUBLICATION -
© COPYRIGHT copyright.dgkc- ALL RIGHTS RESERVED.

LOC	DIST
GP	00

REVISIONS

P	LTR	DESCRIPTION	DATE	DWN	APVD
	-	SEE SHEET 1	-	-	-

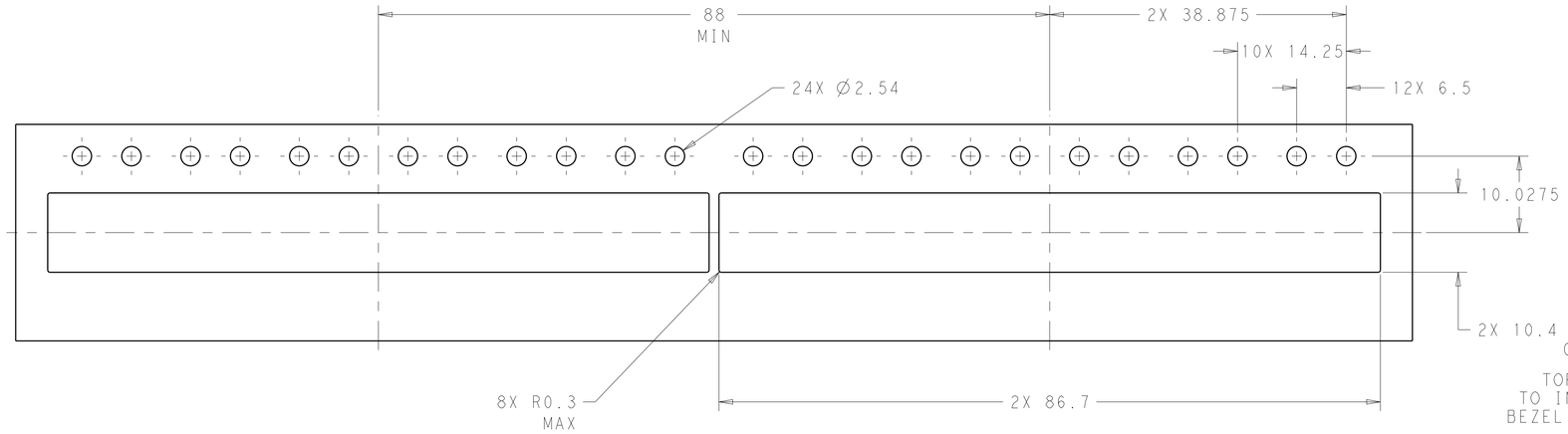

RECOMMENDED BEZEL CUT-OUT
SINGLE SIDED APPLICATIONS
SCALE 5:2

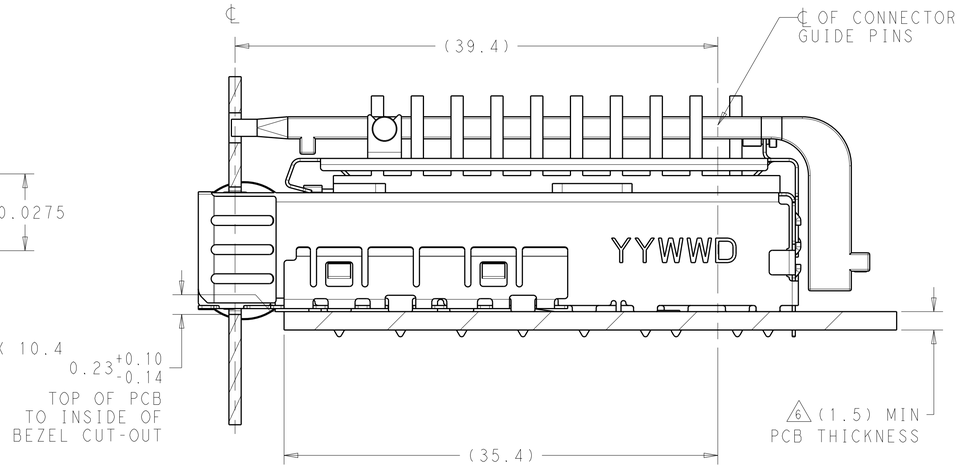

2198236
MOUNTED ON PC BOARD
SHOWN THRU RECOMMENDED BEZEL

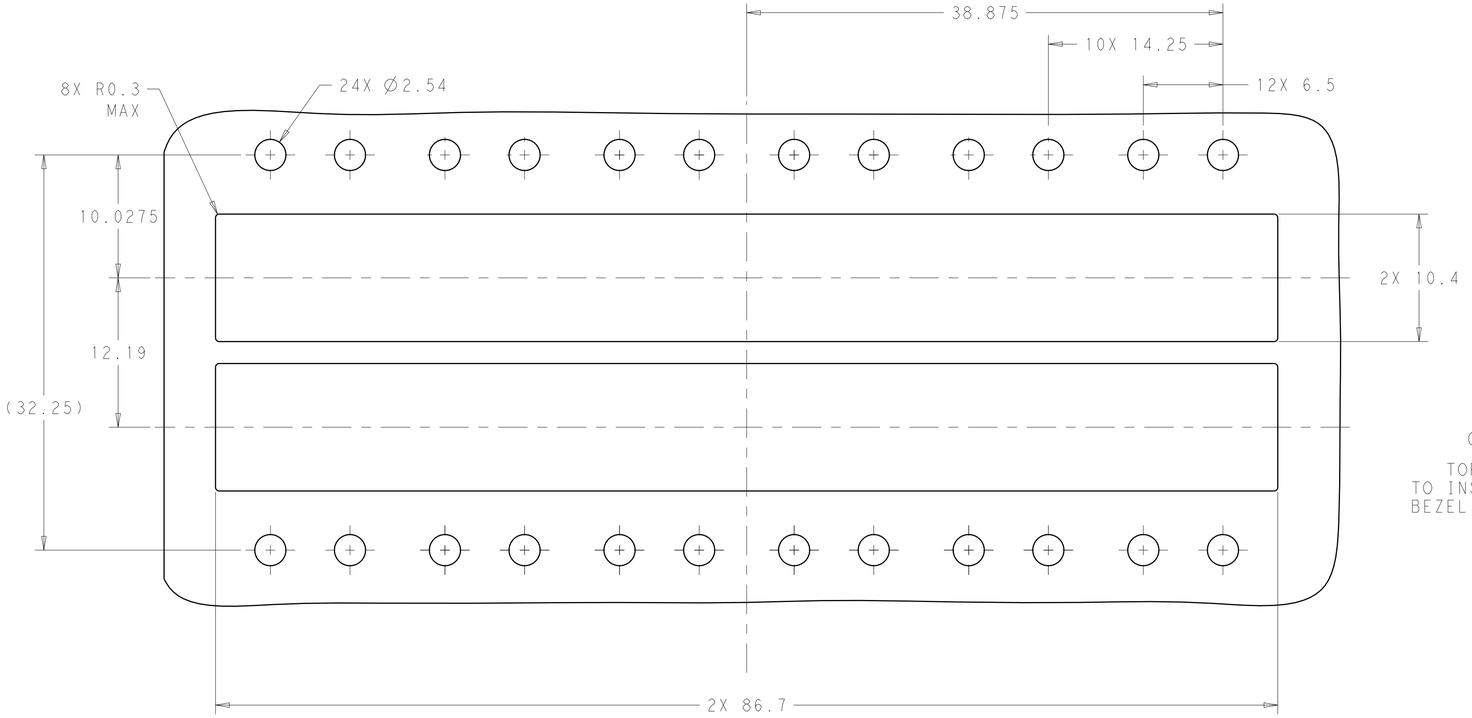

RECOMMENDED BEZEL CUT-OUT
BELLY TO BELLY APPLICATIONS

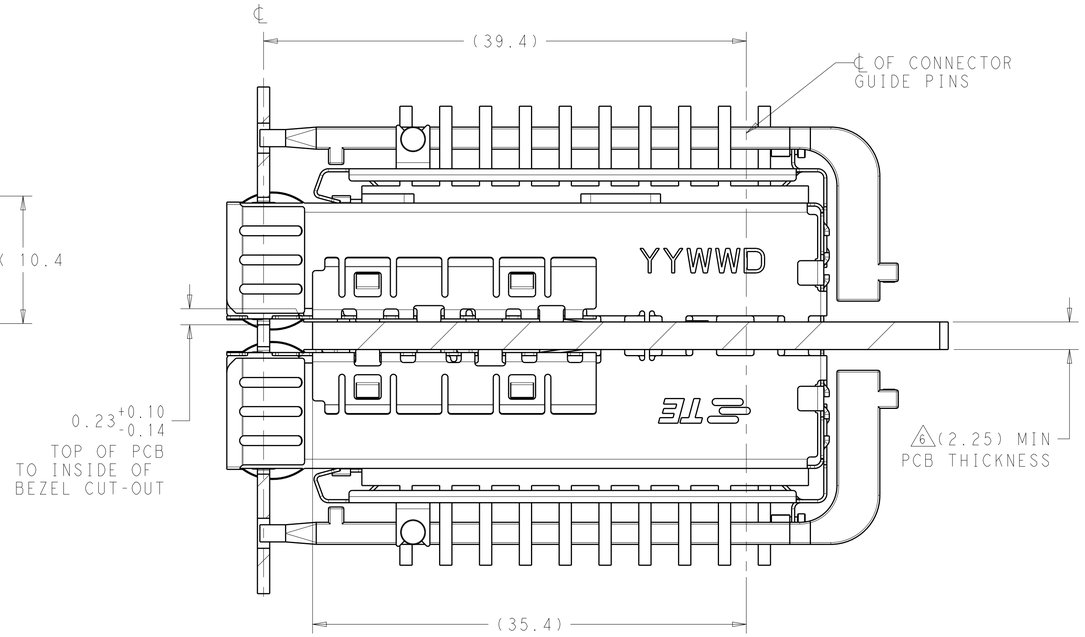

2198236
MOUNTED BELLY TO BELLY ON PC BOARD
SHOWN THRU RECOMMENDED BEZEL

THIS DRAWING IS A CONTROLLED DOCUMENT.

DIMENSIONS: mm

TOLERANCES UNLESS OTHERWISE SPECIFIED:
0 PLC ±0.1
1 PLC ±0.1
2 PLC ±0.1
3 PLC ±0.1
4 PLC ±0.1
ANGLES ±1°

MATERIAL 1
FINISH

DWN B. MATTHEWS 15NOV2011
CHK M. SCHMITT 15NOV2011
APVD M. SCHMITT 15NOV2011
PRODUCT SPEC 108-2364
APPLICATION SPEC 114-13120
WEIGHT -

TE Connectivity

NAME SFP+ ENHANCED 1X6 CAGE ASSEMBLY, PRESS FIT, EXTERNAL EMI SPRINGS WITH HEATSINK AND LIGHTPIPE

SIZE	CAGE CODE	DRAWING NO	RESTRICTED TO
A1	00779	C-2198236	-

Customer Drawing | SCALE 4:1 | SHEET 2 OF 4 | REV A

4805 (3/11)

THIS DRAWING IS UNPUBLISHED. RELEASED FOR PUBLICATION -
© COPYRIGHT copyright.dgkc- ALL RIGHTS RESERVED.

LOC	DIST
GP	00

REVISIONS

P	LTR	DESCRIPTION	DATE	DWN	APVD
	-	SEE SHEET 1	-	-	-

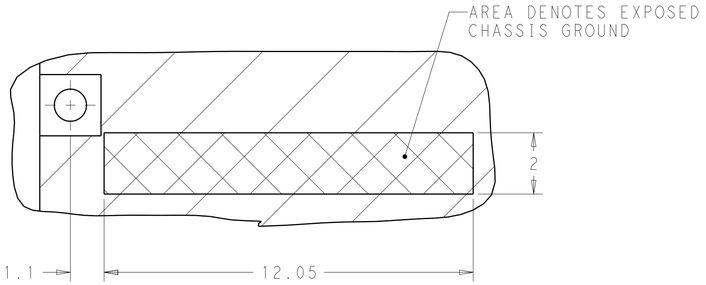

DETAIL A
6X INDIVIDUALLY
SCALE 10:1

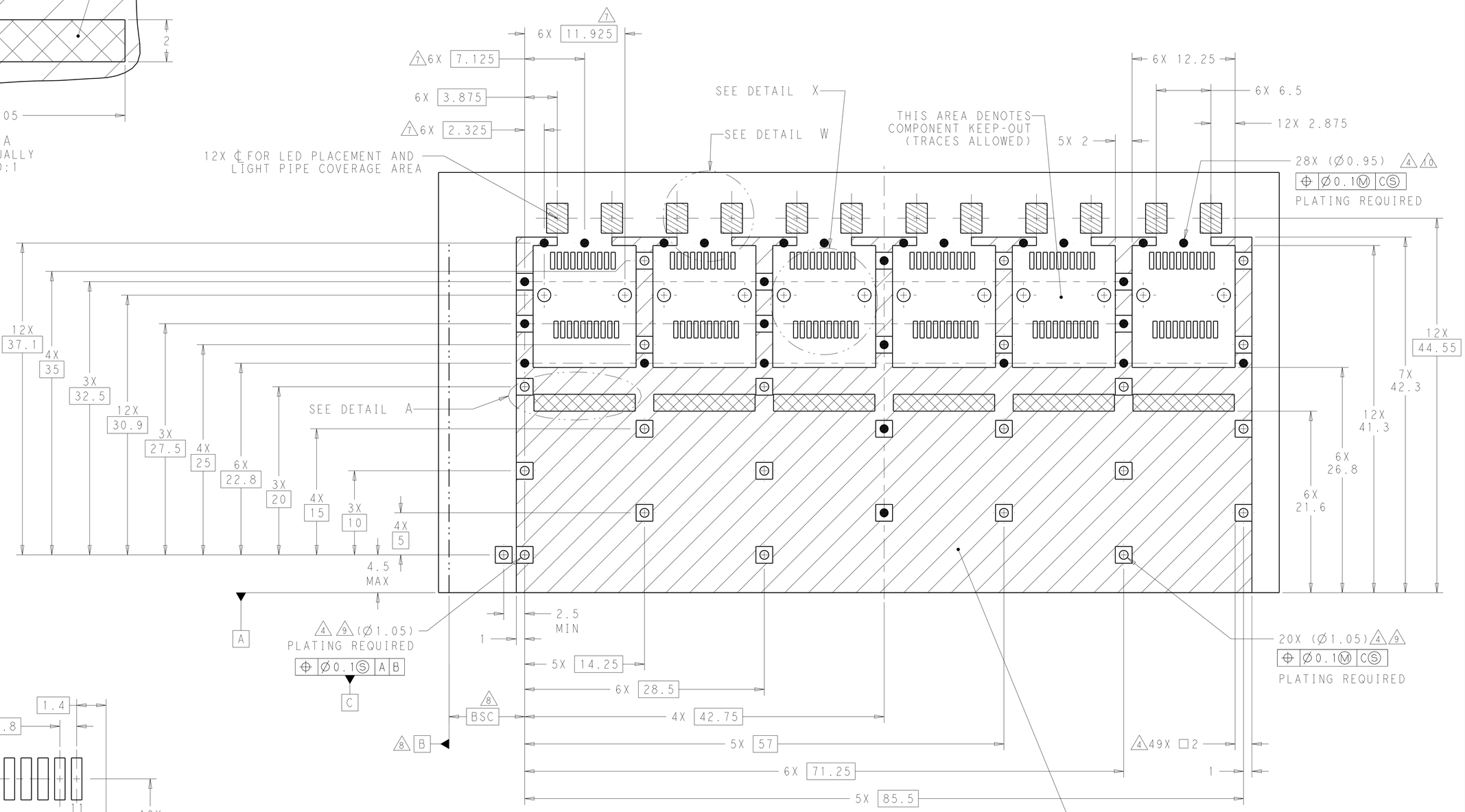

RECOMMENDED PCB CONFIGURATION
WITH KEEP-OUT AREAS
SINGLE SIDED APPLICATIONS
SCALE 4:1

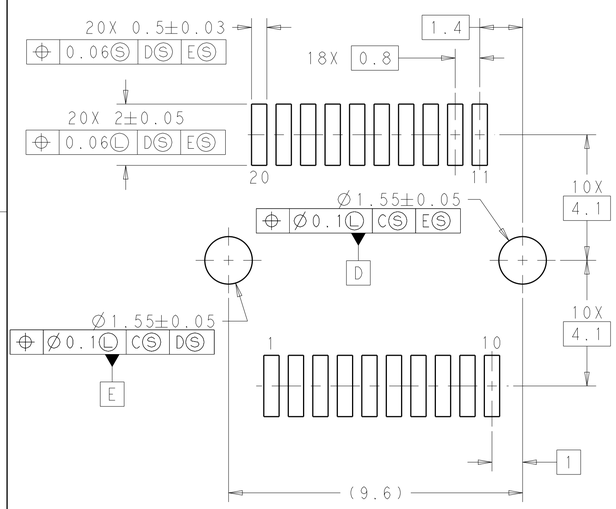

DETAIL X
RECOMMENDED PT CONNECTOR LAYOUT
6X INDIVIDUALLY
SCALE 10:1

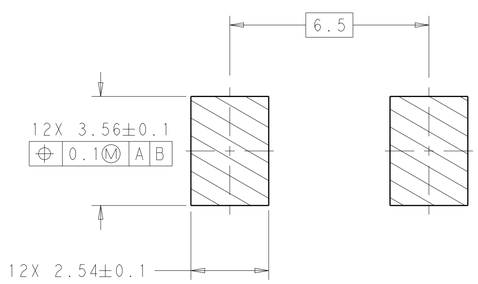

DETAIL W
SCALE 10:1

THIS DRAWING IS A CONTROLLED DOCUMENT.

DIMENSIONS: mm

TOLERANCES UNLESS OTHERWISE SPECIFIED:
0 PLC ±0.1
1 PLC ±0.1
2 PLC ±0.1
3 PLC ±0.1
4 PLC ±0.1
ANGLES ±1°

MATERIAL 1
FINISH

DWN B. MATTHEWS 15NOV2011
CHK M. SCHMITT 15NOV2011
APVD M. SCHMITT 15NOV2011
PRODUCT SPEC 108-2364
APPLICATION SPEC 114-13120
WEIGHT -

TE Connectivity

NAME SFP+ ENHANCED 1X6 CAGE ASSEMBLY, PRESS FIT, EXTERNAL EMI SPRINGS WITH HEATSINK AND LIGHTPIPE

SIZE A1 | CAGE CODE 00779 | DRAWING NO C-2198236 | RESTRICTED TO -

Customer Drawing | SCALE 4:1 | SHEET 3 OF 4 | REV A

THIS DRAWING IS UNPUBLISHED. RELEASED FOR PUBLICATION -
© COPYRIGHT copyright.dgfe- ALL RIGHTS RESERVED.

LOC	DIST
GP	00

REVISIONS

P	LTR	DESCRIPTION	DATE	DWN	APVD
	-	SEE SHEET 1	-	-	-

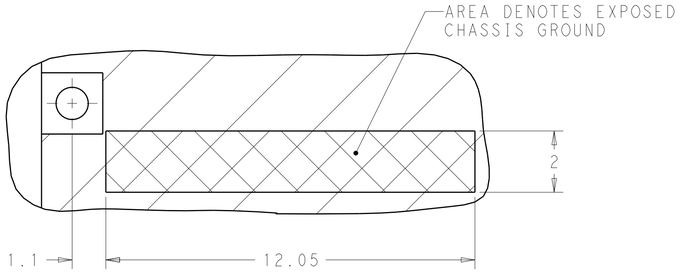

DETAIL B
6X INDIVIDUALLY
SCALE 10:1

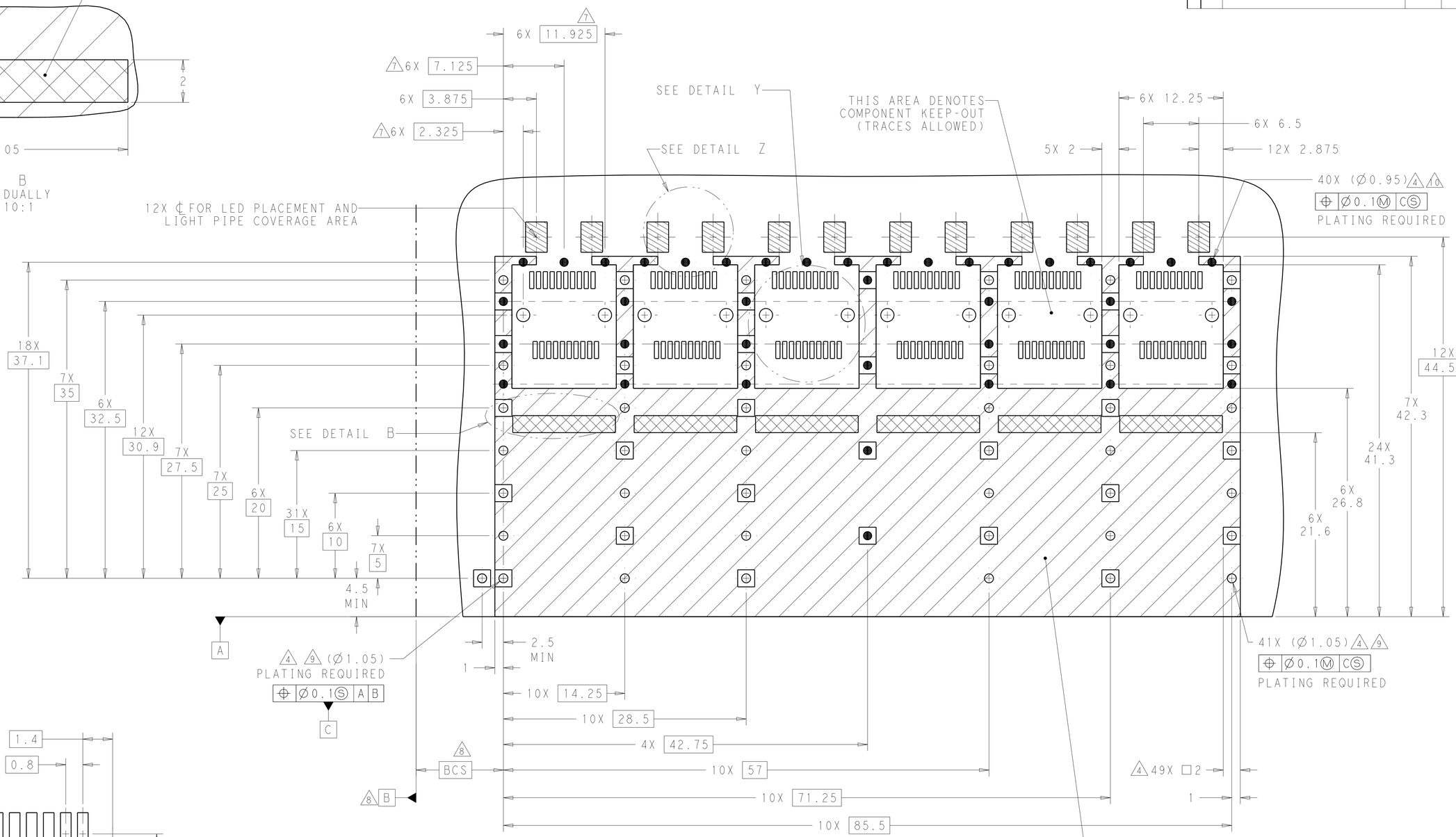

RECOMMENDED PCB CONFIGURATION
WITH KEEP-OUT AREAS
BELLY TO BELLY APPLICATIONS
SCALE 4:1

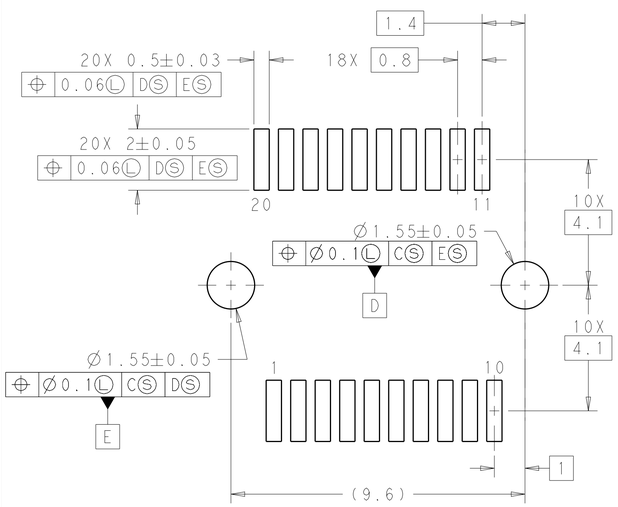

DETAIL Y
RECOMMENDED PT CONNECTOR LAYOUT
12X INDIVIDUALLY
SCALE 10:1

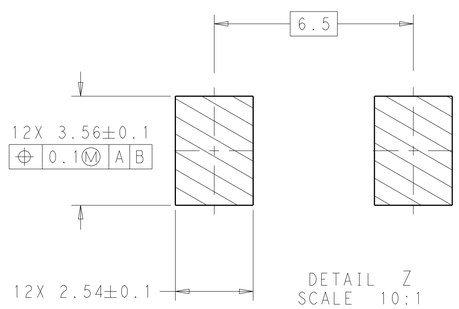

DETAIL Z
SCALE 10:1

THIS DRAWING IS A CONTROLLED DOCUMENT.

DIMENSIONS: mm

TOLERANCES UNLESS OTHERWISE SPECIFIED:
0 PLC ±0.1
1 PLC ±0.1
2 PLC ±0.1
3 PLC ±0.1
4 PLC ±0.1
ANGLES ±1°

MATERIAL 1
FINISH

DWN B. MATTHEWS 15NOV2011
CHK M. SCHMITT 15NOV2011
APVD M. SCHMITT 15NOV2011

PRODUCT SPEC 108-2364
APPLICATION SPEC 114-13120
WEIGHT -

TE Connectivity

NAME SFP+ ENHANCED 1X6 CAGE ASSEMBLY, PRESS FIT, EXTERNAL EMI SPRINGS WITH HEATSINK AND LIGHTPIPE

SIZE	CAGE CODE	DRAWING NO	RESTRICTED TO
A1	00779	C-2198236	-

Customer Drawing SCALE 4:1 SHEET 4 OF 4 REV A

4805 (3/11)