SIGN	DATE	DESCRIPTION	APPROVER
1	09/14'09	Wire guard solder pin is changed from Brass to Copper	Aaron
2	10/20'09	Part NO. is changed	Aaron
3	2010.05.31	Torque is changed from 8.9Lb-in to 5.2Lb-in	Chen Bo
4	2010.05.31	The design is changed	Chen Bo
5	2010.08.11	Clamp is changed	Chen Bo

THIS IS CAD DRAWING, DO NOT REVISE MANUALLY!!!

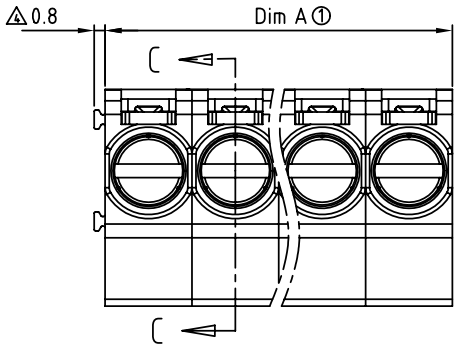

N = Number of poles

Dim A=Nx6.35

Dim B=(N-1)x6.35

Poles	Dim A	Dim B
1-6p	±0.20	±0.15
7-12p	±0.30	±0.25
13-16p	±0.40	±0.35

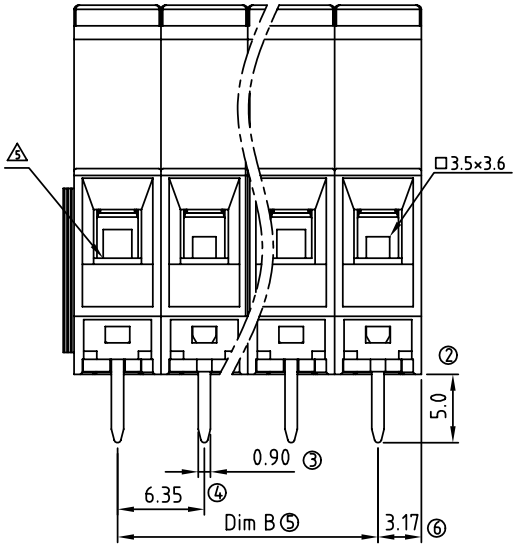

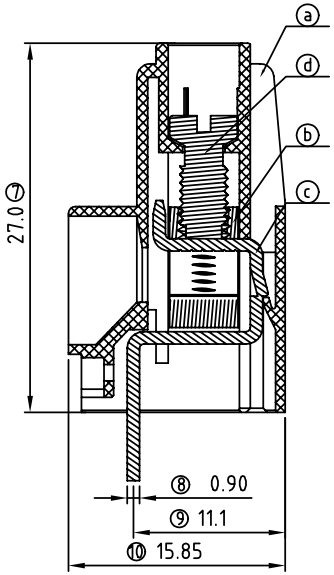

SECTION C-C

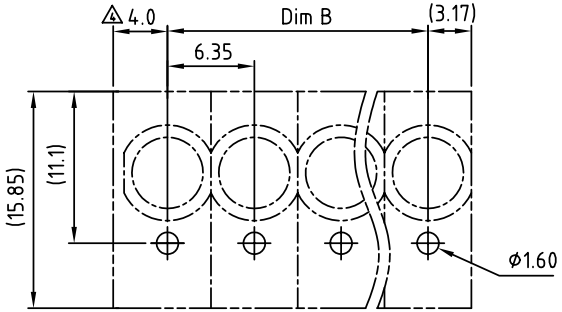

PCB. LAYOUT

Material:

- Item a Terminal housing:Thermoplastic (UL 94V-0)
- Item b Clamp: Brass Ni plated
- 1 Item c Wire guard solder pin (Front single row): Copper Tin plated
- Item d Terminal screw: Steel Zinc plating"-"slot type

Electrical

- Voltage rating: 300VAC
- Current rating: 30A
- Wire range:
- Solid wire(AWG): 10-24
- Stranded wire(AWG): 10-24
- 3 Torque(Lb-In):5.2
- Screw: M3.5
- Wire strip length: 8-9mm
- Withstanding Voltage: 1.6KV
- Operating temperature: -40°C to +115°C
- Soldering temperature: 250°C±10°C/5 Sec
- Safety Approval: c us

2 KP xx 0 1 x 2 xxxx G

RoHS
Pb<40,000ppm

No. of poles end stackable design

01 1 CONTACTS
02 2 CONTACTS
... ...
16 16 CONTACTS

0 Black (RAL9005)
2 Red (RAL3001/D)
3 Orange(RAL2011/P)
4 Yellow(RAL1018/A)
5 Green(RAL6018/T)
6 Blue (RAL5015/A)
8 Grey(RAL7035/D)

0000 Standard @ Logo
000A Standard ANY Logo
Any special item by customer request, please contact sales department.

ANYTEK

CUSTOMER COPY

ALL RIGHTS RESERVED. REPRODUCTION OR ISSUE TO THIRD PARTIES IN ANY FORM WHATEVER IS NOT PERMITTED WITHOUT WRITTEN AUTHORITY FROM THE PROPRIETOR. PROPERTY OF ANYTEK TECHNOLOGY CO., LTD

TITLE	KP 6.35 Series front single row (without cover)				
PART NO.	KPxx01x2xxxxG 2		DWG NO.	8KP0006	
APPROVED	CHECKED	DESIGNED	DRAWN	CUST NO.	
			Chen Bo 2010.08.11	UNIT: mm	
				SCALE: NONE	
				SHEET: 01/01	REV.: F

Tolerance	
X.	±0.50
X.X	±0.30
X.XX	±0.10
X°	±1°