SIGN	DATE	DESCRIPTION	APPROVER
1	2009.09.28	The design is changed from the round hole to hexagonal hole.	Jacke
2	2009.09.28	The current rating is changed from 15A to 10A	Jacke
3	2009.09.28	Add UL standard	Jacke
4	2012.04.17	Flange nut is changed	Chen Bo
5	2012.04.17	The dimension C & D &1.0 are added	Chen Bo
THIS IS CAD DRAWING, DO NOT REVISE MANUALLY!!!			

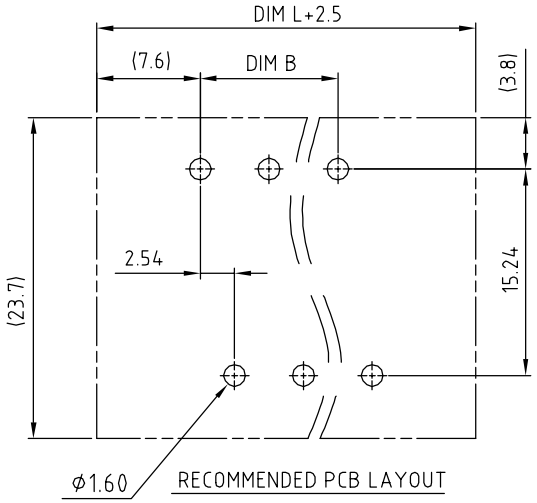

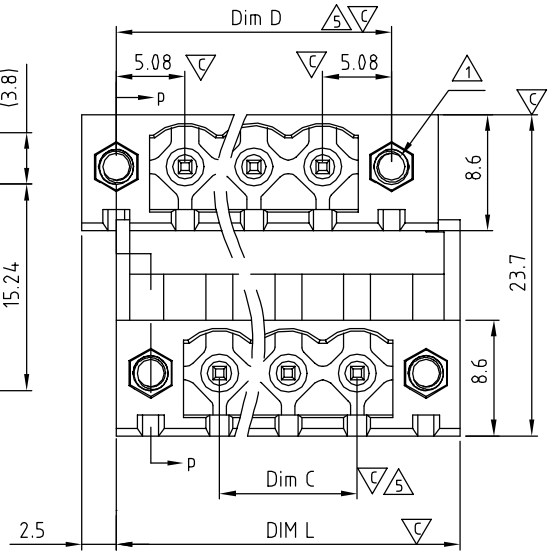

Material

- Item (a) Male contact pin: Copper ,Tin plated
- Item (b) With flange nut: brass M2.5
- Item (c) Terminal(housing): Thermoplastic (UL94V-0)

2 Electrical

- Voltage rating: 300VAC
- Current rating: 10A
- Withstanding Voltage: 1.6KV
- Operating temperature: -40°C to +115°C
- Soldering temperature: 250°C±10°C/5 Sec
- Safety Approval: c UL us
- Critical dimension: C

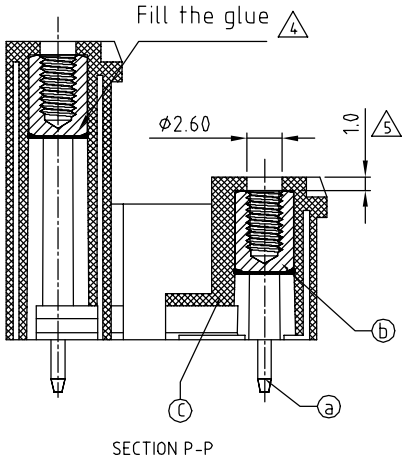

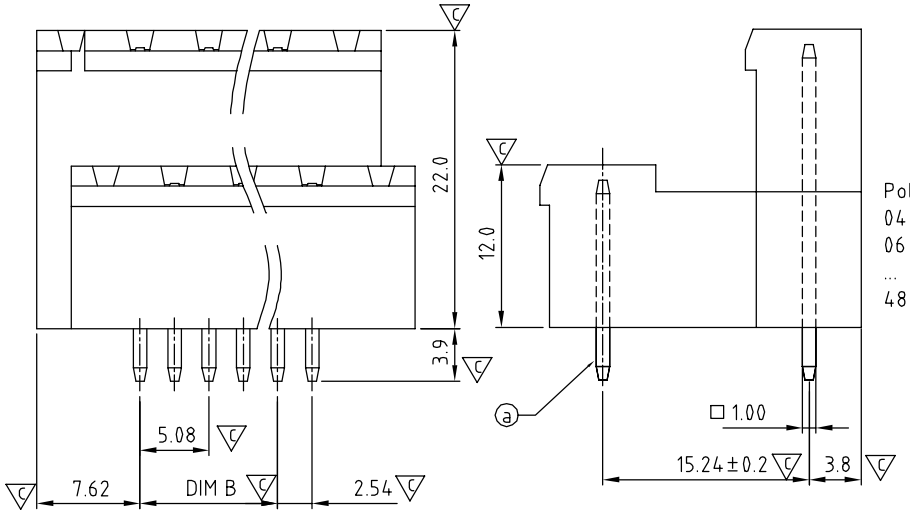

VF xx 52 x 0 xxxx G

Poles
04 2×2Poles
06 2×3Poles
...
48 2×24Poles

Color
0 Black (RAL9005)
2 Red (RAL3001/D)
3 Orange(RAL2011/P)
4 Yellow(RAL1018/A)
5 Green(RAL6018/T)
6 Blue (RAL5015/A)
8 Grey(RAL7035/D)

RoHS compliant (lead<4%) In copper Alloy

0000 Standard @ Logo
000A Standard ANY Logo
Any special item by customer request, please contact sales department.

N=NUMBER OF CONTACTS

Dimension		TOL				
		2×2P-2×5P	2×6P-2×10P	2×11P-2×15P	2×16P-2×20P	2×21P-2×24P
Dim L	(N/2+2)×5.08	±0.15	±0.20	±0.25	±0.30	±0.35
Dim B	(N/2-1)×5.08	±0.15	±0.20	±0.25	±0.30	±0.35
Dim C	(N/2-1)×5.08	±0.15	±0.20	±0.25	±0.30	±0.35
Dim D	(N/2-1)×5.08+10.16	±0.15	±0.20	±0.25	±0.30	±0.35

ANYTEK

CUSTOMER COPY

ALL RIGHTS RESERVED. REPRODUCTION OR ISSUE TO THIRD PARTIES IN ANY FORM WHATEVER IS NOT PERMITTED WITHOUT WRITTEN AUTHORITY FROM THE PROPRIETOR. PROPERTY OF ANYTEK TECHNOLOGY CO., LTD

TITLE	VF-5.08 Series Vertical W/Flange				
PART NO.	VFxx52x0xxxxG			DWG NO.	8VF0102
APPROVED	CHECKED	DESIGNED	DRAWN	CUST NO.	
		Chen Bo 04/17`12	Chen Bo 04/17`12	UNIT: mm	
				SCALE: NONE	
				SHEET: 01/01	REV.: D

Tolerance	
X.	±0.50
X.X	±0.30
X.XX	±0.10
X°	±1°