SIGN	DATE	DESCRIPTION	APPROVER
1	2/06'06	Part No. changed	Tony
2	2/22`12	The Dimension 5.4 is added	Chen Bo
3	10/12`12	Added the Tolerances	Guoxue
4	10/12`12	The screw plating specification is changed	Guoxue

THIS IS CAD DRAWING, DO NOT REVISE MANUALLY!!!

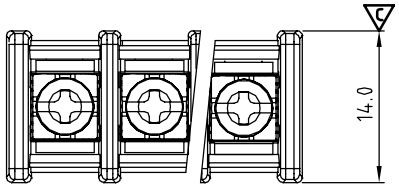

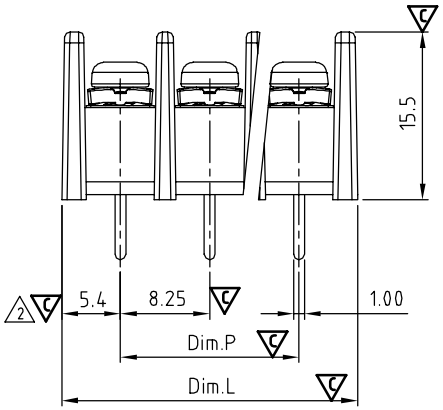

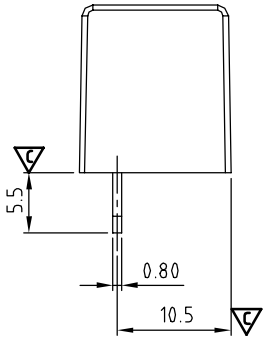

MATERIALS ELECTRICAL

RATED VOLTAGE & CURRENT:	300 V, 20 A
WITHSTAND VOLTAGE:	AC 2000 V/Min
INSULATION RESISTANCE:	1000 MΩ OR MORE AT DC 500 V
OPERATING TEMPERATURE RANG:	-40 °C ~+115 °C
SCREW TORQUE VALUE:	8.8 Lb-In.
WIRE RANGE:	22 - 12 AWG
1) MOLDED PARTS:	Thermoplastic, UL 94 V-0 BLACK
2) TERMINAL:	BRASS, 0.8t, Tin PLATED
3) TERMINAL SCREWS:	STEEL, M3

APPROVAL: cULus

Critical dimension: C

1 PART NO:

YK 414 xx 0 x x 00G

NO. OF POLES
- 02: 2 POLES
- 03: 3 POLES
- 04: 4 POLES
- :
- 30: 30 POLES

MARK
- 0: "@" MARK
- 1: "ANY" MARK

TERMINAL & SCREW PLATED
- 0: TERMINAL & SCREW: G/F
- 4 1: TERMINAL: G/F, SCREW: ZINC
- 2: TERMINAL: Sn, SCREW: G/F
- 4 3: TERMINAL: Sn, SCREW: ZINC

G RoHS compliant (lead<4%) In copper Alloy

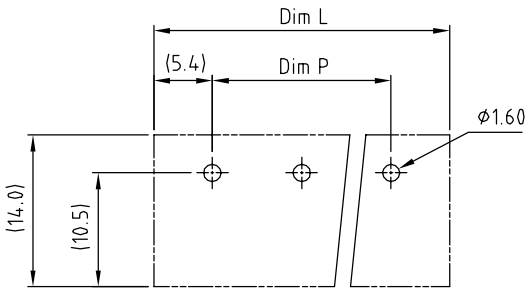

P.C.B Layout
BOTTOM VIEW

N = Number of poles

Dim L=Nx8.25+2.5

Dim P=(N-1)x8.25

3

	Dim L	Dim P
2p-5p	±0.25	±0.25
6p-10p	±0.35	±0.35
11p-18p	±0.40	±0.40
19p-30p	±0.50	±0.50

ANYTEK

CUSTOMER COPY

ALL RIGHTS RESERVED. REPRODUCTION OR ISSUE TO THIRD PARTIES IN ANY FORM WHATEVER IS NOT PERMITTED WITHOUT WRITTEN AUTHORITY FROM THE PROPRIETOR. PROPERTY OF ANYTEK TECHNOLOGY CO., LTD

TITLE	YK-414 W/O Flange Series				
PART NO.	YK414xx0xx00G			DWG NO.	8YK0001-414
APPROVED	CHECKED	DESIGNED	DRAWN	CUST NO.	
			Guoxue 2012.10.17	UNIT: mm	
				SCALE: NONE	
				SHEET: 01/01	REV.: D

Tolerance	
X.	±0.50
X.X	±0.30
X.XX	±0.10
X°	±1°