| SIGN | DATE | DESCRIPTION | APPROVER |
|---|---|---|---|
| ⚠ | 9/17'10 | How to order is changed | Runner |
| | | *THIS IS CAD DRAWING, DO NOT REVISE MANUALLY!!!* | |

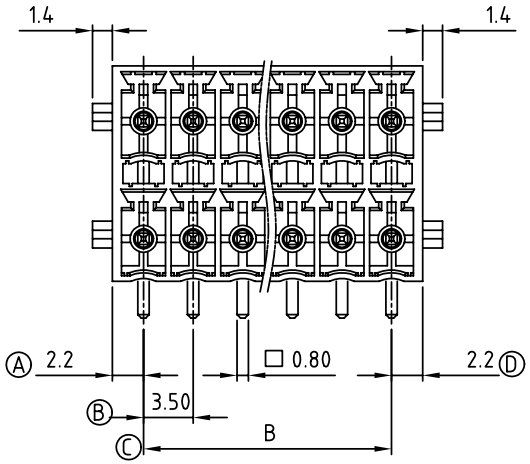


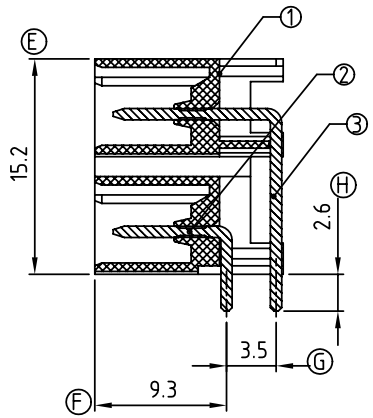


Material:

- Item ① Terminal(housing): PA66 30% GF (UL94V-0)
- Item ② Contact pin of short: Copper Tin plated
- Item ③ Contact pin of long: copper Tin plated

| Electrical: | cULus |
|---|---|
| Voltage rating: | 160V |
| Current rating: | 5.5A |
| Withstanding Voltage: | 1.32 KV |
| Operating temperature: | -40°C to +115°C |
| Soldering temperature: | 250°C ±10°C/5 Sec |
| APPROVAL: | cULus |

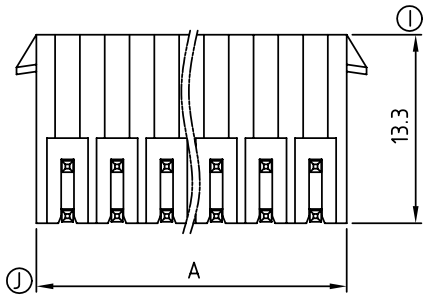


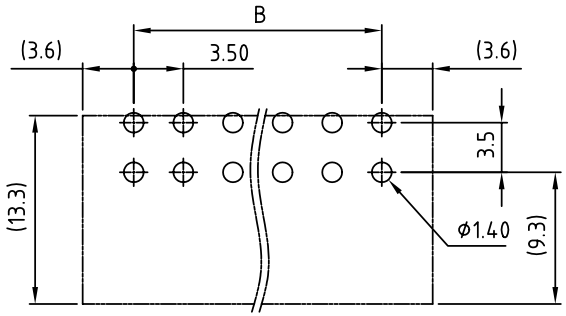


PCB Layout

KE xx 1 3 x 1 xxxx G

No. OF POLES
- 04: 2×2 POLES
- 06: 2×3 POLES
- :
- :
- 48: 2×24 POLES

COLOR
- 0 Black (RAL9005)
- 2 Red (RAL3001/D)
- 3 Orange(RAL2011/P)
- 4 Yellow(RAL1018/A)
- 5 Green(RAL6018/T)
- 6 Blue (RAL5015/A)
- 8 Grey(RAL7035/D)

G: Pb<40000ppm

A00 0: "@" Mark
⚠ A00 A: "ANYTEK" Mark
Any special item by customer requst. please contact sales department.

| POLE | | 2×2 | 2×3 | 2×4 | 2×5 | 2×6 | 2×7 | 2×8 | 2×9 | 2×10 | 2×11 | 2×12 |
|---|---|---|---|---|---|---|---|---|---|---|---|---|
| A | | 7.90 | 11.40 | 14.90 | 18.40 | 21.90 | 25.40 | 28.90 | 32.40 | 35.90 | 39.40 | 42.90 |
| B | | 3.50 | 7.00 | 10.50 | 14.00 | 17.50 | 21.00 | 24.50 | 28.00 | 31.50 | 35.00 | 38.50 |
| Tol. | | ±0.15 | | | | | ±0.20 | | | | | |
| POLE | 2×13 | 2×14 | 2×15 | 2×16 | 2×17 | 2×18 | 2×19 | 2×20 | 2×21 | 2×22 | 2×23 | 2×24 |
| A | 46.40 | 49.90 | 53.40 | 56.90 | 60.40 | 63.90 | 67.40 | 70.90 | 74.40 | 77.90 | 81.40 | 84.90 |
| B | 42.00 | 45.50 | 49.00 | 52.50 | 56.00 | 59.50 | 63.00 | 66.50 | 70.00 | 73.50 | 77.00 | 80.50 |
| Tol. | | ±0.25 | | | | | ±0.30 | | | | | |

**ANYTEK**

**CUSTOMER COPY**

ALL RIGHTS RESERVED. REPRODUCTION OR ISSUE TO THIRD PARTIES IN ANY FORM WHATEVER IS NOT PERMITTED WITHOUT WRITTEN AUTHORITY FROM THE PROPRIETOR. PROPERTY OF ANYTEK TECHNOLOGY CO., LTD

| | | | | | | |
|---|---|---|---|---|---|---|
| TITLE | KE 3.5mm With Holder Series (Right angle) DIP type | | | | | |
| PART NO. | KExx13x1xxxxG | | | DWG NO. | 8KE0008 | |
| APPROVED | CHECKED | DESIGNED | DRAWN | CUST NO. | | Tolerance |
| | | Runner 2010.09.17 | Runner 2010.04.12 | | UNIT: mm | X. ±0.50 |
| | | | | | SCALE: NONE | X.X ±0.30 |
| | | | | SHEET: 01/01 | REV.: C | X.XX ±0.10 |
| | | | | | | X° ±1° |