SIGN	DATE	DESCRIPTION	APPROVER
		THIS IS CAD DRAWING, DO NOT REVISE MANUALLY!!!	

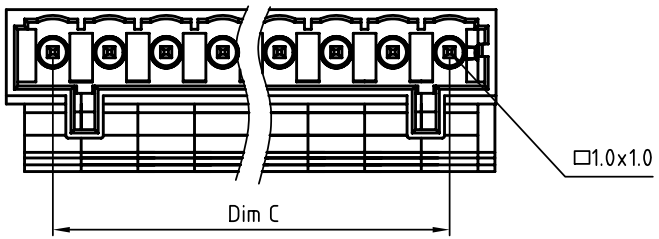

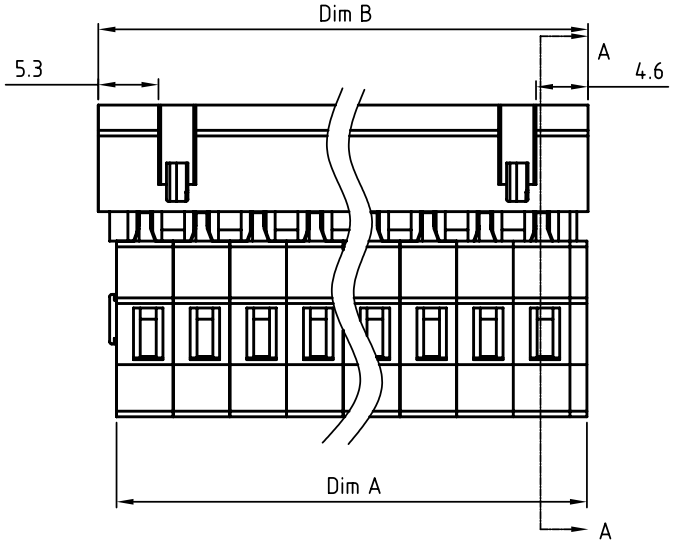

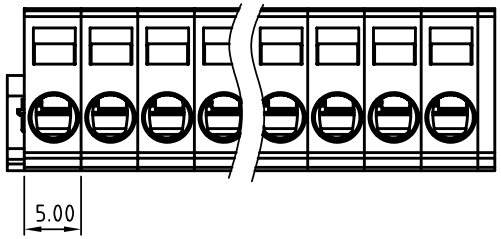

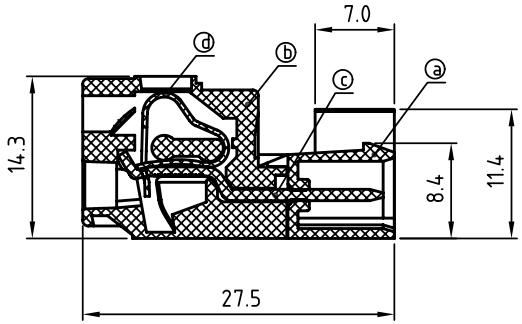

SECTION A-A

Material:

- Item a :Terminal body Thermoplastic (UL94 V-0)
- Item b :Terminal body Thermoplastic (UL94 V-0)
- Item c :Male contact pin: Brass Tin plated
- Item d :Spring clamp: Stainless steel

Electrical

- Voltage rating: 300V
- Current rating: 8A
- Wire range:
- Solid wire(AWG): 12-28
- Stranded wire(AWG): 12-28
- Wire strip length: 8-9mm
- Withstanding Voltage: 1.6KV
- Operating temperature: -40°C to +105°C
- Safety Approval: c us

NB xx 7 0 x 2 xxxx G

- xx: 02 2 poles; 03 3 poles; ... ...; 24 24 poles
- 0: 0 Black; 5 Green (RAL6018/T); 6 Blue; 8 Grey (RAL7035/D)
- xxxx: 0000 Standard @ Logo; 000A Standard ANY Logo; Any special item by customer request, please contact sales department.
- G: RoHS Pb<40,000ppm

N = Number of poles

Dim A=Nx5.0+1.5

Dim B=Nx5.0+3.2

Dim C=(N-1)x5.0

	Dim A	Dim B	Dim C
2-6p	±0.20	±0.20	±0.20
7-12p	±0.25	±0.25	±0.25
13-18p	±0.30	±0.30	±0.30
19-24p	±0.40	±0.40	±0.40

ANYTEK

CUSTOMER COPY

ALL RIGHTS RESERVED. REPRODUCTION OR ISSUE TO THIRD PARTIES IN ANY FORM WHATEVER IS NOT PERMITTED WITHOUT WRITTEN AUTHORITY FROM THE PROPRIETOR. PROPERTY OF ANYTEK TECHNOLOGY CO., LTD

TITLE	NB 5.0mm series Hook holder				
PART NO.	NBxx70x2xxxxG			DWG NO.	8NB0005
APPROVED	CHECKED	DESIGNED	DRAWN	CUST NO.	
		Runner 2010.04.22	Runner 2010.04.22	UNIT: mm / SCALE: 2/1 / SHEET: 01/01 / REV.: B	

Tolerance	
X.	±0.50
X.X	±0.30
X.XX	±0.10
X°	±1°