REV.	ECN NO.	DATE	SIGN	DESCRIPTION
B	C210561	2021/04/12	Vicky	B X4
C	C221953	2022/12/15	Ruru	C X1

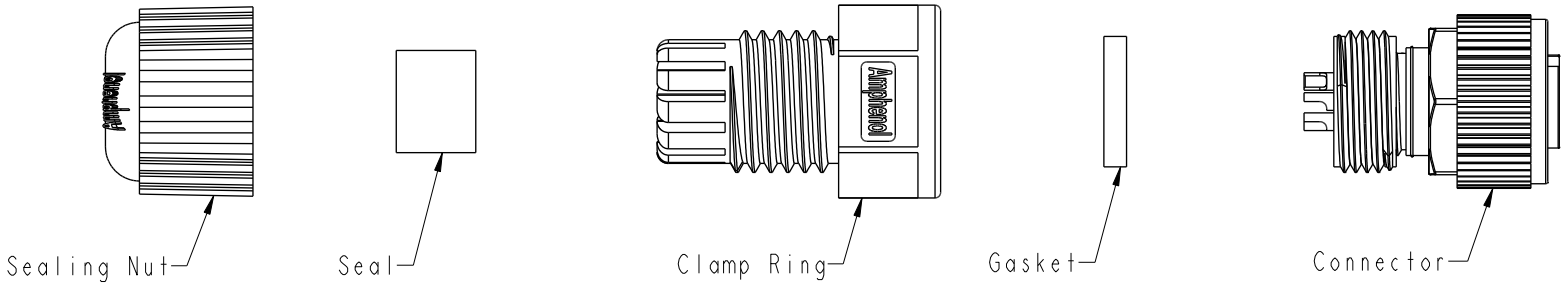

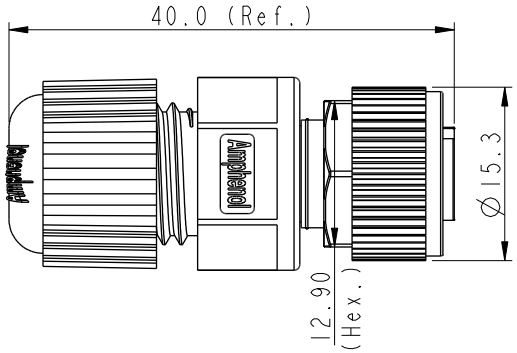

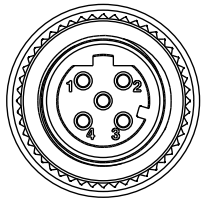

B M12D-XXBFFA-SL8001

XX: No. Of Pin

B Note:
* RoHS Compliant
* QC Important Dimension
C * Waterproof rate: IP68, mated 1m/24h
* Connector
  Housing: Thermoplastic, Black
  Pin: Copper alloy, Gold plated
  Extension Nut: Thermoplastic, Black
  Nut: Metal
  O-Ring: Rubber, Gray
* Gasket: Rubber, Gray
* Clamp Ring: Thermoplastic, Black
* Sealing Nut: Thermoplastic, Black
* Seal: Rubber, Gray, OD:Ø4.5mm~Ø6.5mm
* One set unassembled in one pe bag

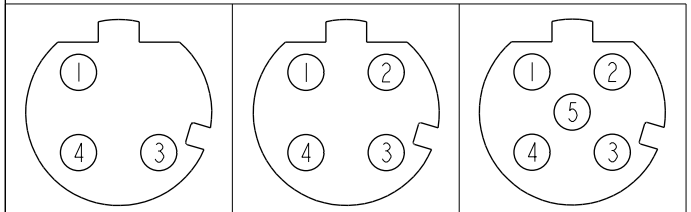

Pin Assignments Front View

UNIT: mm

TOLERANCE
.X ±0.25
.XX ±0.1
.XXX ±0.05
ANGLES ±1°

B

TITLE: N SEN, M12 D, SCREW CABLE W/O SR, F, F, FI SOLDER B			
SCALE 1:1	SIZE A4	SHEET 1 OF 1	
REV. C	WC-REV. A.5	QC: Inspection item	

Amphenol LTW
安費諾亮泰企業股份有限公司

ITEM NO	DRAWN BY JC Chen	DATE 2019/08/29
DWG NO M12D-XXBFFA-SL8001	CHECKED BY Li Feng	DATE 2019/08/29
CUSTOMER ALTW	APPROVED BY Jerry	DATE 2019/08/29

W10814-03-[illegible]01A2

THIS DOCUMENT IS SUBJECT TO CHANGE WITHOUT NOTICE. IT IS CONFIDENTIAL AND A PROPERTY OF Amphenol LTW. DISCLOSURE TO THIRD PARTY HAS TO BE AUTHORIZED BY Amphenol LTW.