SIGN	DATE	DESCRIPTION	APPROVER
1	04/23'08	Part No. is changed.	Marvin
2	08/25'09	Poles is changed from 2p-24p to 4p-24p	Aaron
3	09/14'09	Add chamfer	Aaron
4	09/22'11	Structure changed	ChenMing

THIS IS CAD DRAWING, DO NOT REVISE MANUALLY!!!

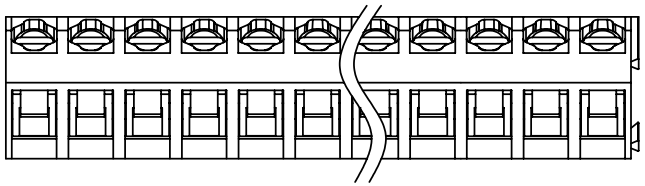

Dimension A&B

DIM A	N×5.0
DIM B	(N-1)×5.0

N=Number of contacts

Poles	A&B Tolerance	▱ C
4P-8P	±0.15	0.20
9P-14P	±0.25	0.20
15P-20P	±0.35	0.20
21P-24P	±0.40	0.40

Material:

- Item① Clamp: Brass,Ni plated
- Item② Terminal screw: Steel Zinc plating "-" slot type.
- Item③ Wire guard solder pin: Brass, Tin plated
- Item④ Terminal housing: Thermoplastic (UL94V-0)

Electrical:	cULus
Voltage rating:	300V
Current rating:	10A
Wire range:	
Solid wire(AWG):	12-22
Stranded wire(AWG):	12-22
Torque:	3.5 Lb-In
Screw:	M2.5
Wire strip length:	6-7mm
Withstanding Voltage:	1.6 KV
Operating temperature:	-40°C to +115°C
Soldering temperature:	250°C±10°C/5 Sec
Safety Approval:	c UL us
Critical dimension:	▽

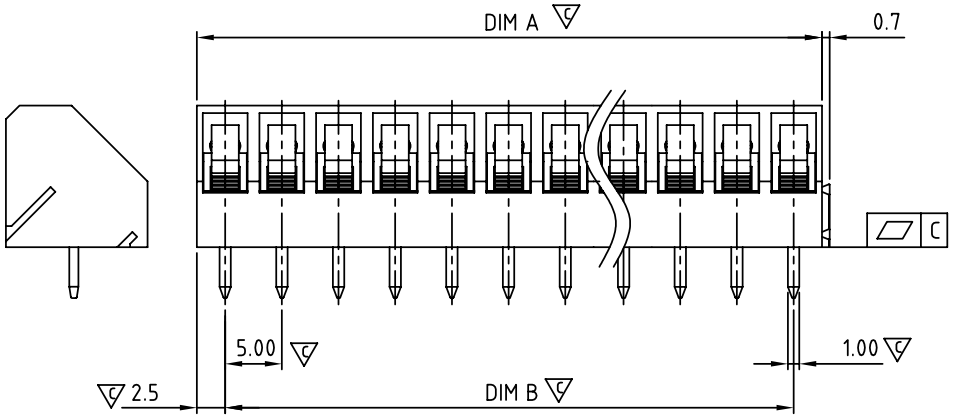

N= Number of contacts

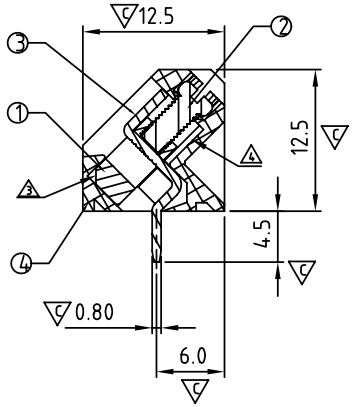

TG xx 0 1 x 0 C xxx G ③

G: Pb<40000ppm

② 04	4 POLES	0: BLACK	000 "@" Logo
05	5 POLES	5: GREEN	00A "ANYTEK" Mark
	:	6: BLUE	Any special item by customer requst. please contact sales department.
24	24 POLES	8: GREY	

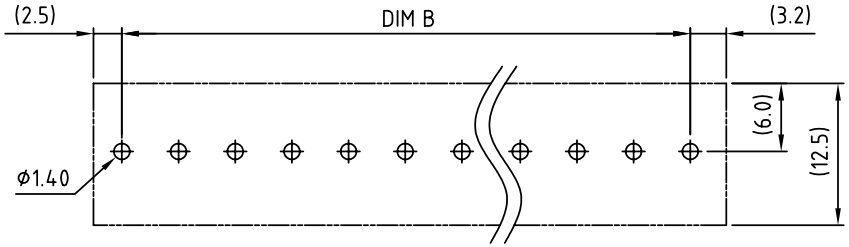

PCB LAYOUT

ANYTEK

CUSTOMER COPY

ALL RIGHTS RESERVED. REPRODUCTION OR ISSUE TO THIRD PARTIES IN ANY FORM WHATEVER IS NOT PERMITTED WITHOUT WRITTEN AUTHORITY FROM THE PROPRIETOR. PROPERTY OF ANYTEK TECHNOLOGY CO., LTD

TITLE	TG 5.0mm Series Long Interlock solid block type 4p-24p ②				
PART NO.	TGxx01x0CxxxG			DWG NO.	8TG0104
APPROVED	CHECKED	DESIGNED	DRAWN	CUST NO.	
			ChenMing 2011.09.22	UNIT: mm	
				SCALE: NONE	
				SHEET: 01/01	REV.: F

Tolerance	
X.	±0.50
X.X	±0.30
X.XX	±0.10
X°	±1°