SIGN	DATE	DESCRIPTION	APPROVER
1	01/18'07	Soldering temperature changed from 245° to 250°	Tason
2	01/18'07	Part NO is Changed	Tason
THIS IS CAD DRAWING, DO NOT REVISE MANUALLY!!!			

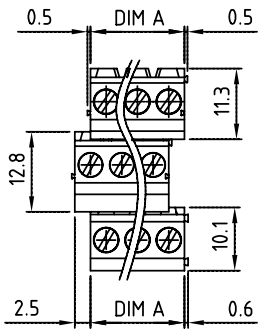

Dimension A&B

DIM A	N×5.0
DIM B	(N-1)×5.0

N=Number of contacts

Poles	A&B Tolerance
2P-8P	±0.15
9P-14P	±0.25
15P-20P	±0.35
21P-24P	±0.40

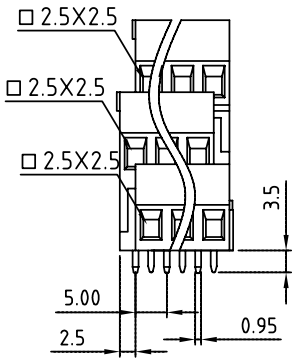

N=Number of contacts(Olny 1 level)

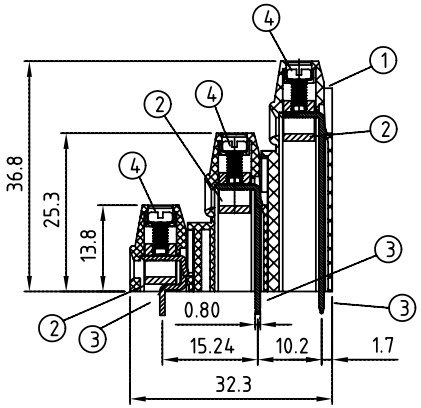

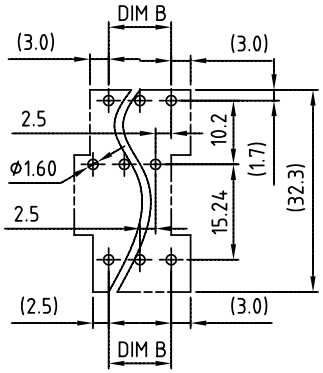

P.C.B. LAYOUT

Material:

- Item 1 Terminal housing : Thermoplastic (UL 94V-0)
- Item 2 Clamp : Brass ,Ni plated
- Item 3 Wire guard solder pin : Brass ,Tin plated
- Item 4 Terminal screw: Steel Zinc plating"-"slot type

Electrical cULus

- Voltage rating: 300VAC
- Current rating: 10A
- Wire range:
- Solid wire(AWG): 12-24
- Stranded wire(AWG): 12-24
- Torque(Lb-In): 3.5
- Screw: M2.5
- Wire strip length: 6-7mm
- Withstanding Voltage: 1.6KV
- Operating temperature: -40°C to +115°C
- 1 Soldering temperature: 250°C±10°C/5 Sec
- Safety Approval: c UL us

2 YN xx 01 x 0 xxxx G

- xx: 06 2×3P; 09 3×3P; ... ...; 72 3×24p
- x: 0 Black; 5 Green (RAL6018/T); 6 Blue; 8 Grey (RAL7035/D)
- xxxx: 0000:"@"Logo (Standard); 000A:"ANYTEK"Logo; Any special item by customer request, please contact sales department.
- G: Pb < 40,000ppm (RoHS)

ANYTEK

CUSTOMER COPY

ALL RIGHTS RESERVED. REPRODUCTION OR ISSUE TO THIRD PARTIES IN ANY FORM WHATEVER IS NOT PERMITTED WITHOUT WRITTEN AUTHORITY FROM THE PROPRIETOR. PROPERTY OF ANYTEK TECHNOLOGY CO., LTD

TITLE	YN-5.0mm SERIES				
PART NO.	YNxx01x0xxxxG			DWG NO.	8YN0001
APPROVED	CHECKED	DESIGNED	DRAWN	CUST NO.	
		熊海燾 2007.01.25	熊海燾 2007.01.25	UNIT: mm / SCALE: NONE / SHEET: 01/01 / REV.: D	

Tolerance	
X.	±0.50
X.X	±0.30
X.XX	±0.10
X°	±1°