Jan.1.2022 Copyright 2022 HIROSE ELECTRIC CO., LTD. All Rights Reserved.
In case of consideration for using Automotive equipment / device which demand high reliability, kindly contact our sales window correspondents.

	COUNT	DESCRIPTION OF REVISIONS	BY	CHKD	DATE		COUNT	DESCRIPTION OF REVISIONS	BY	CHKD	DATE
△					. .	△					. .
△					. .	△					. .
△					. .	△					. .

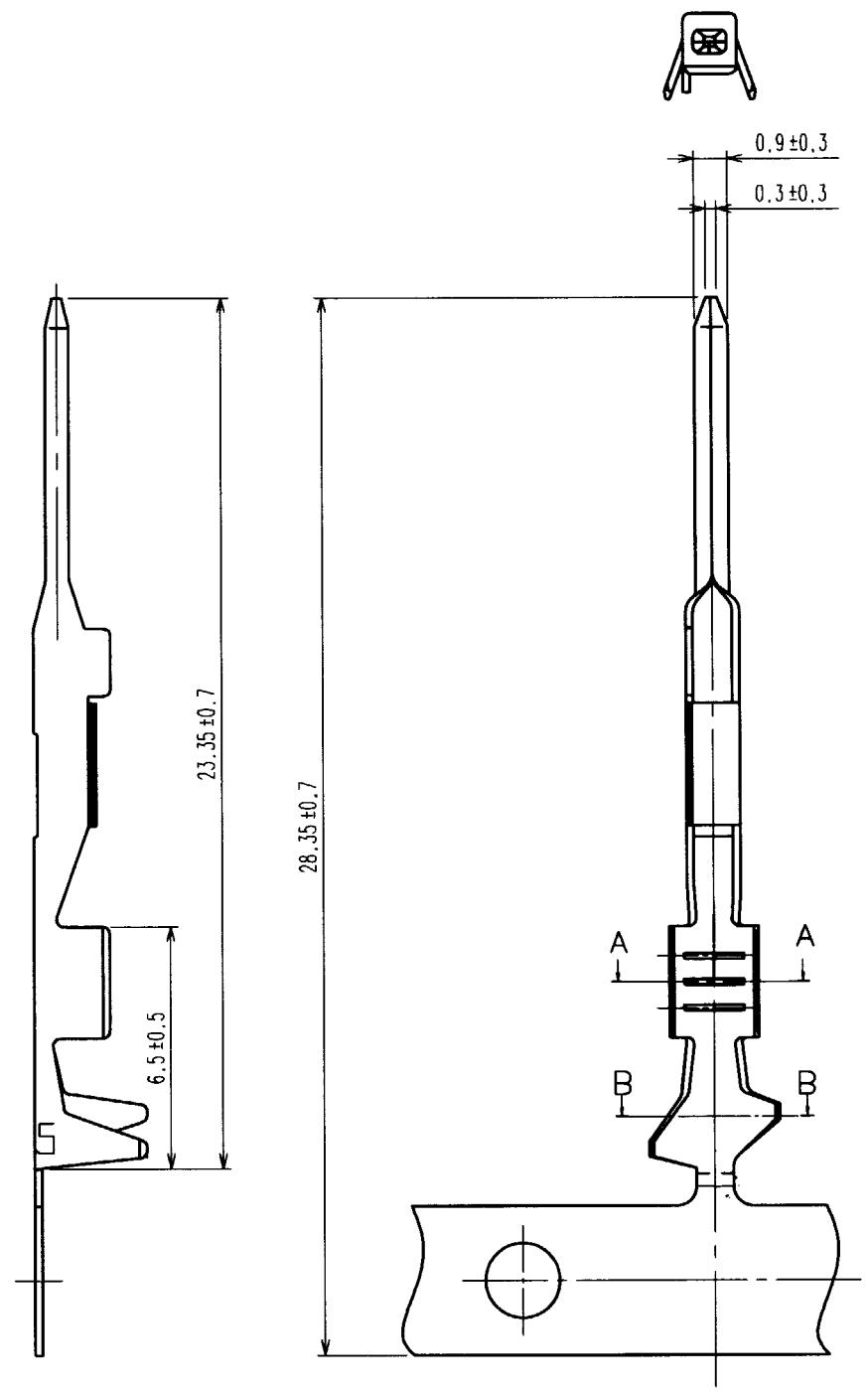

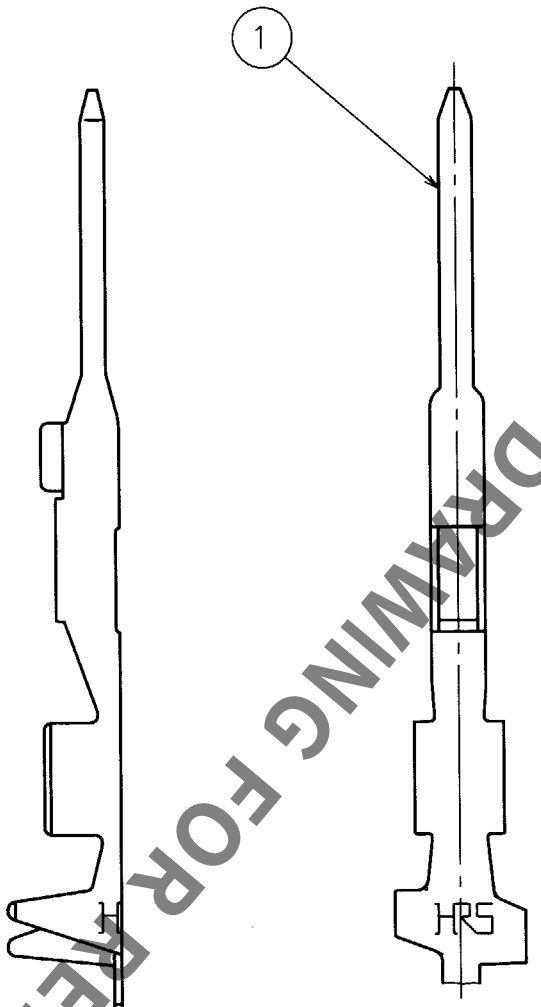

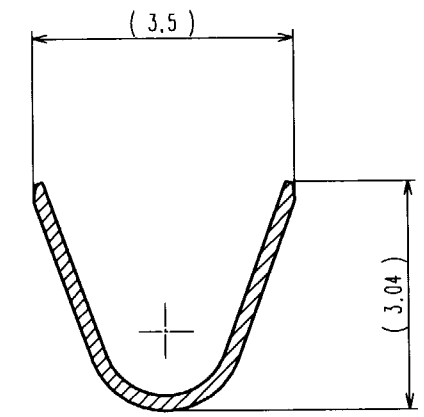

B-B (10 : 1)

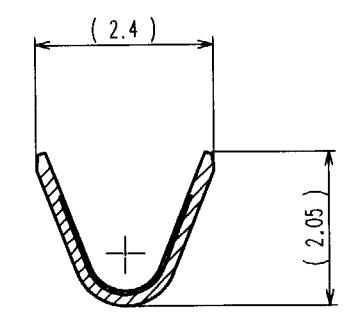

A-A (10 : 1)

HRS DRAWING FOR REFERENCE

NOTE1. ONE REEL CONSISTS OF 10000 PIECES OF CONTACTS.

NO.	MATERIAL	FINISH, REMARKS	NO.	MATERIAL	FINISH, REMARKS
			1	BRASS	TIN PLATED

CODE NO.(OLD)	DRAWN	DESIGNED	CHECKED	APPROVED	RELEASED
	K.NEI '01.10.25	K.NEI '01.10.25	M.Ueada '01.10.26	K.Sato '01.10.26	. .

SCALE 5 : 1	DRAWING NO. EDC3-165832	PART NO. GT10A-2022PCF
UNITS mm	HRS HIROSE ELECTRIC CO., LTD	CODE NO. CL760-0015-9 1/1

TO