SIGN	DATE	DESCRIPTION	APPROVER
1	11/25'04	The dimension changed from N×3.81 TO N×3.81+0.80	何恩華
2	11/25'04	Part No. changed from VMxx35x2 to VMxx35x2G	何恩華
3	02/07'06	Part No. changed	Tony
4	12/02'08	Flange screw changed from "-" to "+/-"	Kind
5	2010.03.11	Add the rib for 2P - 6P .	Jacke

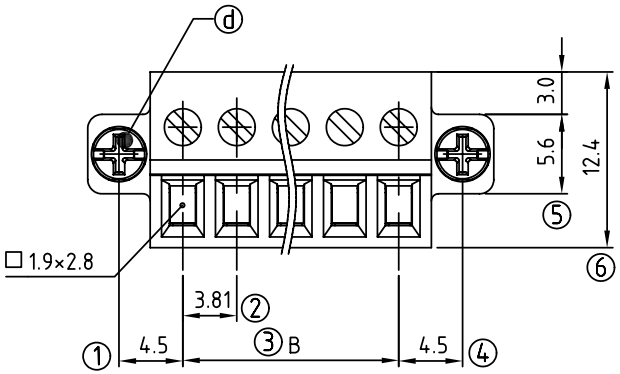

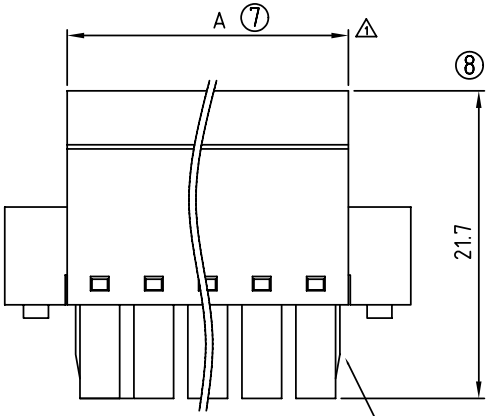

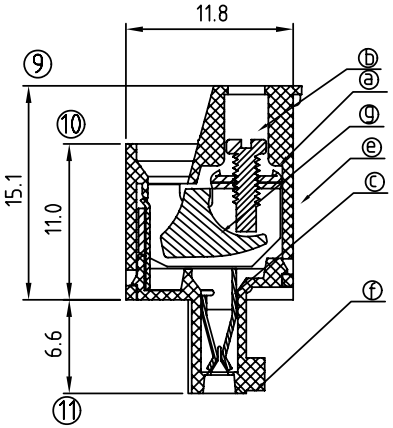

2p to 6p with wedge,above7p
without wedge(including 7p)

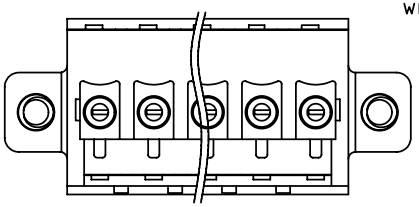

Material

- Item a Clamp: Steel zine plated.
- Item b Terminal screw: Brass Zinc plating "-" slot type
- Item c Female contact: PhBz Tin plated
- Item d With flange screw: Steel zine plated M2.5"+/-"slot type
- Item e Terminal (Up body): Thermoplastic (UL94V-0)
- Item f Terminal (Down body): Thermoplastic (UL94V-0)
- Item g Clampcage:Steel Zinc plated

Electrical cULus

- Voltage rating: 300VAC
- Current rating: 10A
- Wire range:
- Solid wire(AWG): 16-28
- Stranded wire(AWG): 16-28
- Torque: 1.7Lb-In
- Screw: M2
- Wire strip length: 6-7mm
- Withstanding Voltage: 1.6KV
- Operating temperature: -40°C to +115°C
- Safety approval: c us
- 3 1 Part No.:

VM xx 3 5 x 2 xxxx G

POLES
02 pole
,,, ,,,
24 pole

Color
0 Black (RAL9005)
2 Red (RAL3001/D)
3 Orange(RAL2011/P)
4 Yellow(RAL1018/A)
5 Green(RAL6018/T)
6 Blue (RAL5015/A)
8 Grey(RAL7035/D)

0000: "@"logo
000A: "ANYTEK"logo
Any special item by customer requst. please contact sales department.

G: Pb<40000ppm

POLE		2	3	4	5	6	7	8	9	10	11	12
A		8.42	12.23	16.04	19.85	23.66	27.47	31.28	35.09	38.90	42.71	46.52
B		3.81	7.62	11.43	15.24	19.05	22.86	26.67	30.48	34.29	38.10	41.91
Tol.		±0.20					±0.25					
POLE	13	14	15	16	17	18	19	20	21	22	23	24
A	50.33	54.14	57.95	61.76	65.57	69.38	73.19	77.00	80.81	84.62	88.43	92.24
B	45.72	49.53	53.34	57.15	60.96	64.77	68.58	72.39	76.20	80.01	83.82	87.63
Tol.		±0.30					±0.40					

ANYTEK

CUSTOMER COPY

ALL RIGHTS RESERVED. REPRODUCTION OR ISSUE TO THIRD PARTIES IN ANY FORM WHATEVER IS NOT PERMITTED WITHOUT WRITTEN AUTHORITY FROM THE PROPRIETOR. PROPERTY OF ANYTEK TECHNOLOGY CO., LTD

TITLE	VM 3.81mm W/Flange Series					
PART NO.	VMxx35x2xxxxG			DWG NO.	8VM0202	
APPROVED	CHECKED	DESIGNED	DRAWN	CUST NO.		Tolerance
		Jacke 2010.03.11	Jacke 2010.03.11		UNIT: mm	X. ±0.50
					SCALE: NONE	X.X ±0.30
				SHEET: 01/01	REV.: E	X.XX ±0.10
						X° ±1°