Honeywell	LIMIT SWITCH	GKM
		MTG-GK-207

MTG-GK-207

REPLACES

DRAWING NUMBER M

RELEASE No. A020-12

ISSUE 13

REVISIONS	
2	PR#5
	I. WEIR
3	CO#123
	J. BOYD
4	CO#351
	J. BOYD
5	DR#204
	I. WEIR
6	CO#998
	I. WEIR
7	CO#1197
	J. BOYD
8	CO#1629
	J. BOYD
9	PR#1336
	M. LOCH
10	CO#2651
	M.LOCH
11	0015193
	KRB
12	0027801
	MST 24JAN07
13	0039389
	KRB. 03MAY08

DO NOT SCALE PRINT

MODIFY ON CAD SYSTEM ONLY

DRAWN	M. LOCH	11/96
CHECK	J. BOYD	11/96
DESIGN	J. BOYD	11/96
AUTHOR'N	P.TRICKETT	11/96

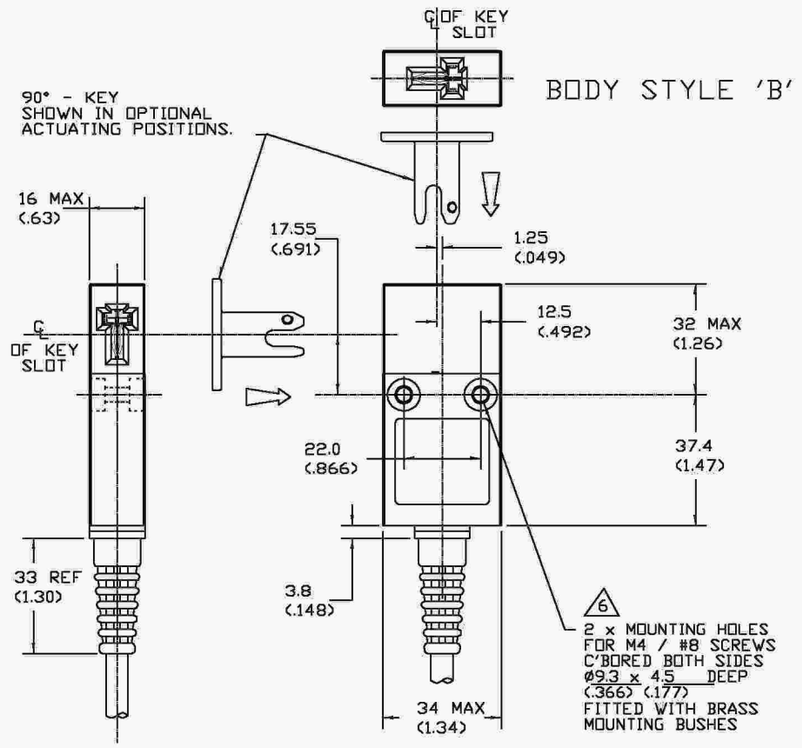

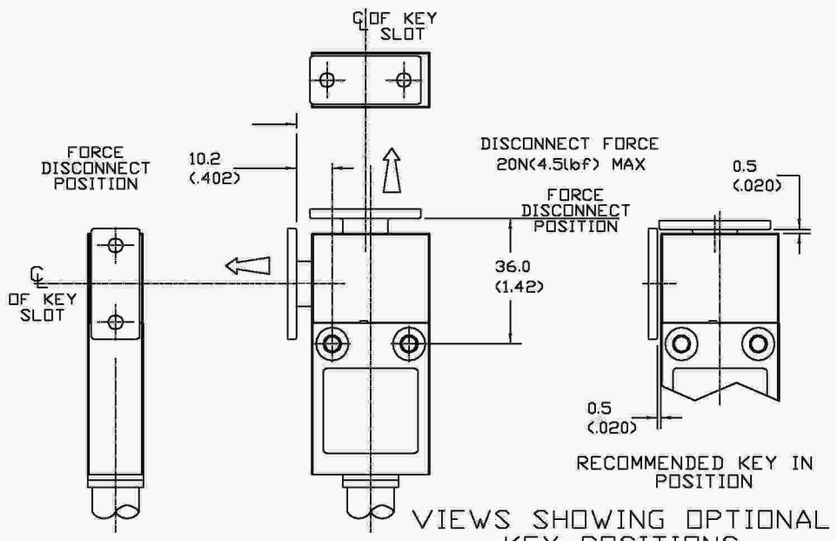

VIEWS SHOWING OPTIONAL KEY POSITIONS

ELECTRICAL RATINGS FOR BODY STYLE A, B, C, D			ELECTRICAL RATINGS BODY STYLE "E"		ENVIRONMENTAL	APPROVALS
STANDARD Ag CONTACTS		Au PLATE CONTACTS	STANDARD Ag CONTACTS	Au PLATED CONTACTS		
AC	DC					
B300 AC15 Ue Ie	Q300 DC13 Ue Ie					
VOLTS AMPS	VOLTS AMPS					
120 3	125 0.55	I_{th} = 5A	30VDC, 2A MAX	1VDC 10uA MIN	IP67 NEMA 1,12,13	EN60947-5-1
240 1.5	250 0.27	1V 10uA MIN.		30VDC 100mA MAX	TEMP RANGE : -25°C TO 85°C, -13°F TO 185°F	
I_{th}=5A	U_i =500V	50V 100mA MAX.	I_{th} = 2A	I_{th} = 2A	STORAGE : -40°C TO 85°C, -40°F TO 185°F	
	U_{imp} =2.5KV				SHOCK : 50G PER IEC 68-2-27 VIBRATION : 10G PER IEC 68-2-6	

THE COPYRIGHT OF THIS DRAWING IS THE PROPERTY OF HONEYWELL LTD. THE DRAWING IS SUPPLIED IN CONFIDENCE AND MUST NOT BE USED FOR ANY PURPOSE OTHER THAN THAT FOR WHICH IT IS SUPPLIED.

THIRD ANGLE PROJECTION

SCALE -

DIMENSIONS ARE IN MM/INCHES.

GKM D 0 3

BODY STYLE	
A	SIDE EXIT CABLE
B	BOTTOM EXIT CABLE
C	SIDE EXIT CONNECTOR
D	BOTTOM EXIT CONNECTOR
E	TWIN CONNECTOR

CABLE	
0	NO CABLE
1	CABLE
&	LENGTH
3	(METRES)

SWITCH TYPE	
3	SLOW BBM(1N.C 1N.O)
6	SLOW 2 x N.C.
7	SLOW 2 x N.C. GOLD PLATED CONTACTS
9	SLOW BBM(1N.C 1N.O) GOLD PLATED CONTACTS

NOTES:-

1. RED GLASS FILLED POLYESTER BODY, BLACK GLASS FILLED POLYAMIDE COVER AND STAINLESS STEEL KEY.
2. ENCLOSURE DOUBLE INSULATED TO IEC 536 CLASS II.
3. CABLE IS UL STYLE2661, 105°C 300V. CORES HAVE 105°C RATED PVC OVER 20 AWG (16/0.2MM) BARE COPPER. OUTER SHEATH IS ALSO 105°C RATED PVC AND HAS FINAL O.D. = 6.33±0.2MM.
4. STANDARD CONNECTOR TYPE : BRAD-HARRISON 4 PIN MICROCHANGE, DC STYLE, MALE TYPE, WITH EXTERNAL INTERLOCK THREAD (M12). CONNECTORS HAVE BLACK GLASS FILLED POLTESTER BODY.
5. MINIMUM OPERATING VELOCITY (V min) = 2.0 mm/s (0.08"/s)
   MAXIMUM OPERATING VELOCITY (Vmax) = 200 mm/s (8"/s)
   MAXIMUM OPERATING FREQUENCY (Fmax)= 2 Hz (120 ops/min)
6. RECOMMENDED TIGHTENING TORQUE FOR MOUNTING SCREWS = 1 - 1.4 Nm (9 - 12 in.lbs)
7. NEW LISTINGS WILL NOT INCLUDE ACTUATOR KEYS WHICH WILL BE SOLD SEPARATELY.
   GKZ51M = STRAIGHT KEY , GKZ52M = 90°KEY.
   STANDARD CABLE LENGTHS WILL NOW BE 1 & 3 METRES ONLY.
8. FOR KEYWAY POSITION REFERENCE BODY STYLE "E"
9. FOR MINIMUM DOOR RADIUS : SEE FIGURE "A"

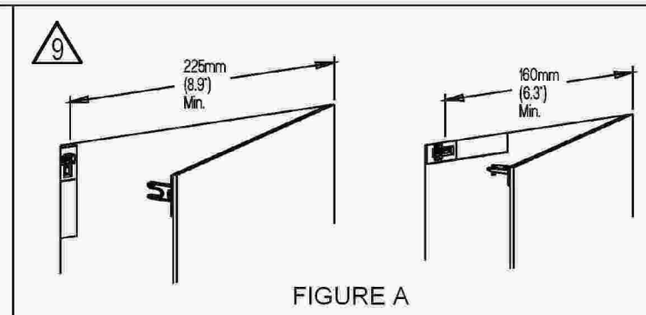

FIGURE A

SLOT DUST COVER

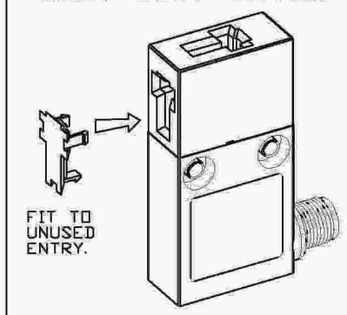

BODY STYLE 'A'

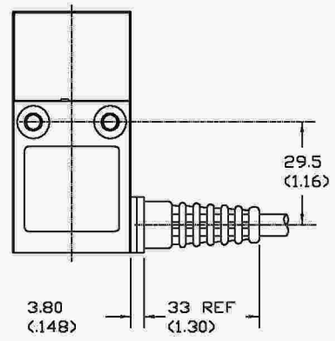

BODY STYLE 'C' 8

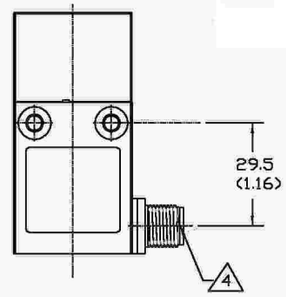

BODY STYLE 'D' 8

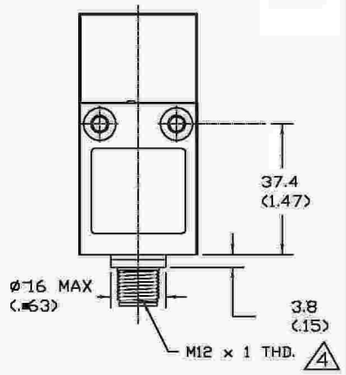

BODY STYLE "E"

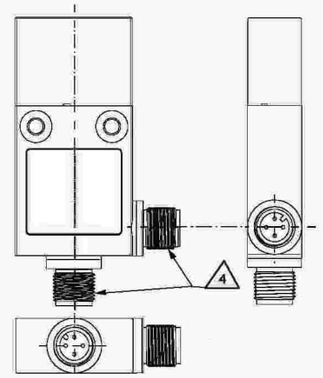

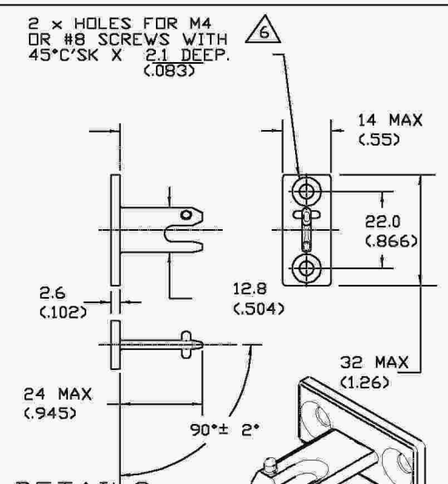

DETAILS OF 90° KEY

GKZ52M - 90° KEY
GKZ52M-BP (BULK PACK, 50PCS.)

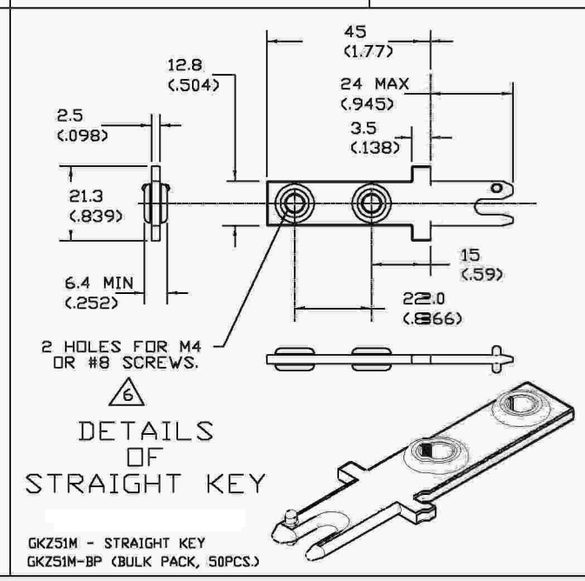

DETAILS OF STRAIGHT KEY

GKZ51M - STRAIGHT KEY
GKZ51M-BP (BULK PACK, 50PCS.)

SWITCH DIAGRAMS

N.B. SWITCHES SHOWN IN KEY-IN POSTION.

CONNECTOR PIN-OUTS

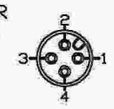

MALE 4

SWITCH TYPES 3 & 9

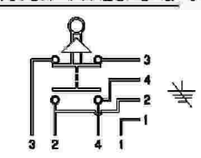
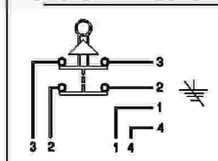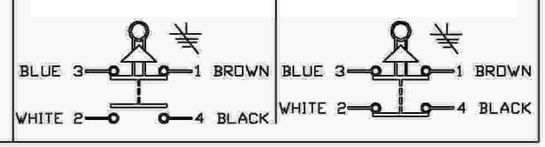
SWITCH TYPES 6 & 7