SIGN	DATE	DESCRIPTION	APPROVER
⚠			

THIS IS CAD DRAWING, DO NOT REVISE MANUALLY!!!

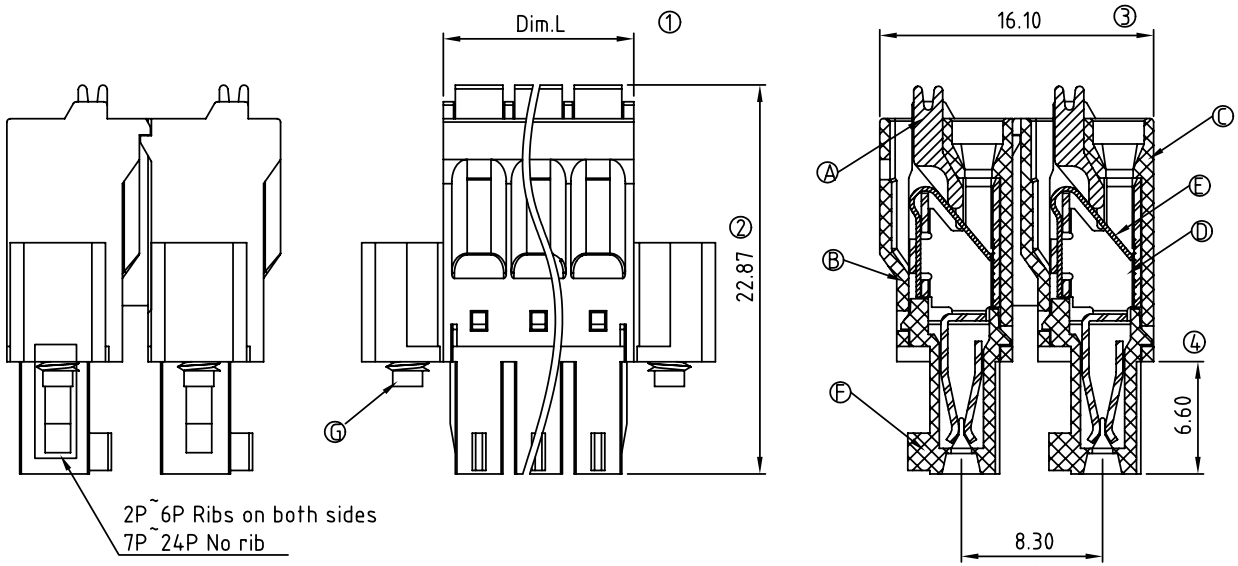

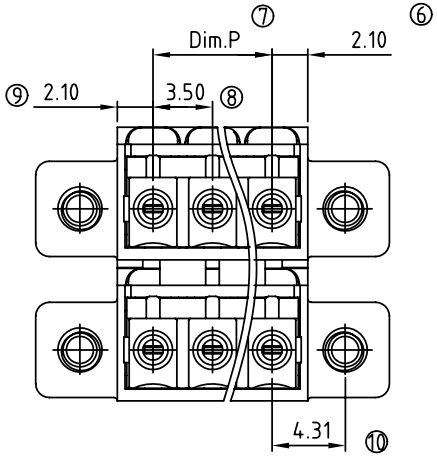

Material:

- Item Ⓐ Terminal lever: Thermoplastic (UL94V-0)
- Item Ⓑ Terminal top housing: Thermoplastic (UL94V-0)
- Item Ⓒ Terminal back housing: Thermoplastic (UL94V-0)
- Item Ⓓ Female contact : PhBz Tin Plated.
- Item Ⓔ Spring clamp : Stainless steel
- Item Ⓕ Terminal down housing: Thermoplastic (UL94V-0)
- Item Ⓖ With flange screw:Steel Zinc plating M2.5"+/-" slot type

Electrical:	cULus
Voltage rating:	160 V
Current rating:	5.5 A
Wire range:	
Solid wire(AWG):	16-24
Stranded wire(AWG):	16-24
Wire strip length:	9-10 mm
Withstanding Voltage:	1.32 KV
Operating temperature:	-40°C to +115°C
APPROVAL:	cULus

KD xx 1 0 x 1 Axxx G

No. OF POLES
- 04: 2x2 POLES
- 06: 2x3 POLES
- :
- 48: 2x24 POLES

COLOR
- 0: BLACK
- 5: GREEN (RAL 6018/T)
- 6: BLUE
- 8: GREY (RAL 7035/D)

A000: "@" Logo (Standard)
A00A: "ANYTEK" Mark
Any special item by customer requst. please contact sales department.

G: Pb<40000ppm

POLE		2	3	4	5	6	7	8	9	10	11	12
Dim.L		7.70	11.20	14.70	18.20	21.70	25.20	28.70	32.20	35.70	39.20	42.70
Dim.P		3.50	7.00	10.50	14.00	17.50	21.00	24.50	28.00	31.50	35.00	38.50
Tol.		±0.15					±0.25					
POLE	13	14	15	16	17	18	19	20	21	22	23	24
Dim.L	46.20	49.70	53.20	56.70	60.20	63.70	67.20	70.70	74.20	77.70	81.20	84.70
Dim.P	42.00	45.50	49.00	52.50	56.00	59.50	63.00	66.50	70.00	73.50	77.00	80.50
Tol.	±0.30						±0.40					

ANYTEK

CUSTOMER COPY

ALL RIGHTS RESERVED. REPRODUCTION OR ISSUE TO THIRD PARTIES IN ANY FORM WHATEVER IS NOT PERMITTED WITHOUT WRITTEN AUTHORITY FROM THE PROPRIETOR. PROPERTY OF ANYTEK TECHNOLOGY CO., LTD

TITLE	KD 3.5mm W/ Flange Body (Double level) Series					
PART NO.	KDxx10x1AxxxG			DWG NO.	8KD0402	
APPROVED	CHECKED	DESIGNED	DRAWN	CUST NO.		Tolerance
		Runner 2010.05.17	Runner 2010.05.17		UNIT: mm	X. ±0.50
					SCALE: NONE	X.X ±0.30
				SHEET: 01/01	REV.: B	X.XX ±0.10
						X° ±1°