SIGN	DATE	DESCRIPTION	APPROVER
1	4.26	Material change.	Richard
2	11.17'05	Electrical is changed.	Marvin
3	10/11'06	Added VDE standard	Steady
4	01/20.07	The soldering emperature from245° to 250°	Aaron
5	2010.08.12	The design is changed	Chen Bo

THIS IS CAD DRAWING, DO NOT REVISE MANUALLY!!!

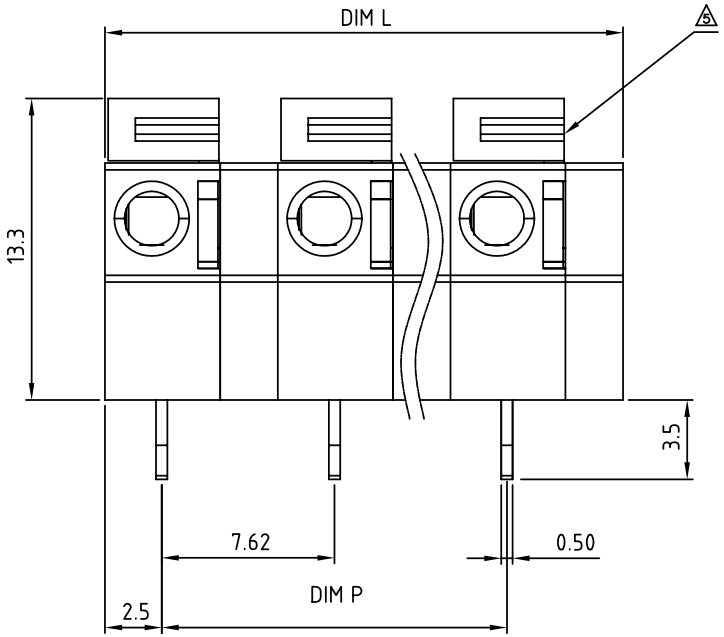

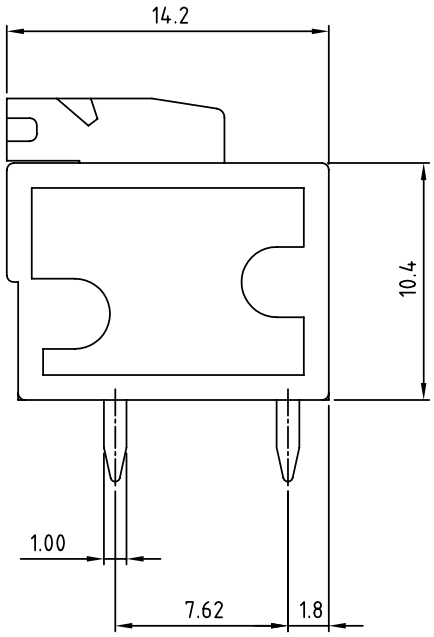

N=Number of contacts

1 Material

- Terminal body (Contact pin): Brass
- Wire guard: Stainless steel
- Surface of solder tail: Tin plated
- Insulator (housing): Thermoplastic (UL94V-0)

3 2 Electrical cULus/VDE

- Voltage rating: 300VAC/450VAC
- Current rating: 10A/10A
- Wire range: 0.75-1.5mm²
- Solid wire(AWG): 14-24
- Stranded wire(AWG): 14-24
- Pull force:
- Screw:
- Wire strip length: 9-10mm
- Withstanding Voltage: 1.6KV/2.5KV
- Operating temperature: -40°C to +115°C
- 4 Soldering temperature: 250°C±10°C/5 Sec
- Safety Approval:

c UL us VDE

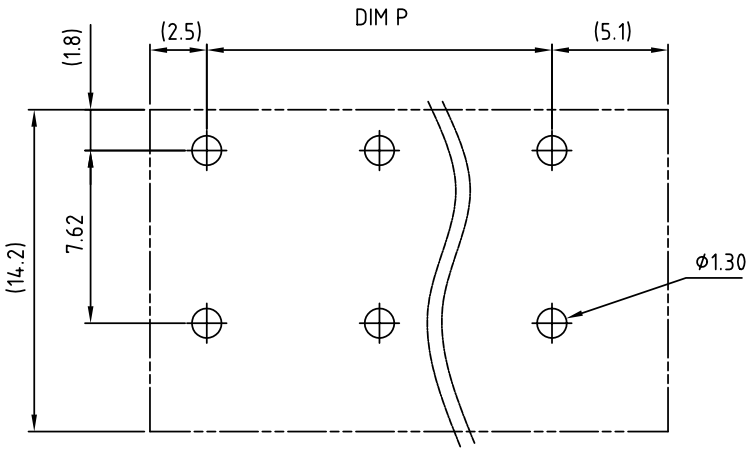

P.C.B. LAYOUT

N = Number of poles
Dim L=Nx7.62
Dim P=(N-1)x7.62

	Dim L	Dim P
2-6p	±0.15	±0.10
7-12p	±0.20	±0.20
13-18p	±0.30	±0.25
19-24p	±0.40	±0.30

HA xx 21 x 0 xxxx G

- xx: 02 2 CONTACTS; 03 3 CONTACTS; ... ...; 16 16 CONTACTS
- 21: 2 Red; 3 Orange; 5 Green(RAL6018/T); 8 Grey(RAL7004/P)
- xxxx: 0000: "@" Logo (Standard); 000A: "ANYTEK" Mark; Any special item by customer requst. please contact sales department.
- G: Pb<40,000ppm

ANYTEK

CUSTOMER COPY

ALL RIGHTS RESERVED. REPRODUCTION OR ISSUE TO THIRD PARTIES IN ANY FORM WHATEVER IS NOT PERMITTED WITHOUT WRITTEN AUTHORITY FROM THE PROPRIETOR. PROPERTY OF ANYTEK TECHNOLOGY CO., LTD

TITLE	HA-7.62mm 180° series				
PART NO.	HAxx21x0xxxxG			DWG NO.	8HA0202
APPROVED	CHECKED	DESIGNED	DRAWN	CUST NO.	
			Chen Bo 2010.08.12	UNIT: mm	
				SCALE: NONE	
				SHEET: 01/01	REV.: F

Tolerance	
X.	±0.50
X.X	±0.30
X.XX	±0.10
X°	±1°