SIGN	DATE	DESCRIPTION	APPROVER
1	3/22'06	Hole size changed from 0.5mm to 1.3mm	Tony
2	01/12 07	Soldering temperature changed from 245° to 250°	Tason
3	01/12 07	Part NO is Changed	Tason
4	6/04'08	Operating temperature is Changed	Marvin
5	6/04'08	Body type is Changed	Marvin
6	11/09'10	Add is " VDE "	Aaron

THIS IS CAD DRAWING, DO NOT REVISE MANUALLY!!!

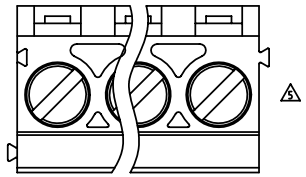

DIMENSION

Dim L	NX5.08
Dim A	(N-1)X5.08

Poles	Tolerance
2p-6p	±0.15
7p-12p	±0.25
13p-18p	±0.35
19p-24p	±0.40

Material:

- Item 1 Terminal housing:Thermoplastic (UL 94V-0)
- Item 2 Clamp: Brass Ni plated
- Item 3 Wire guard solder pin:Brass Tin plated
- Item 4 Terminal screw: Steel Zinc plating"-"slot type

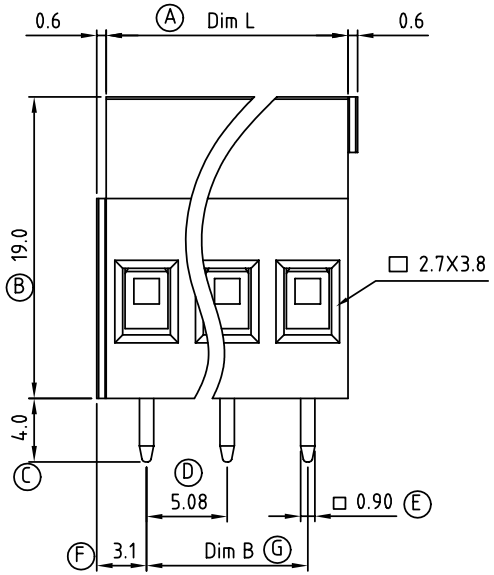

N=Number of contacts

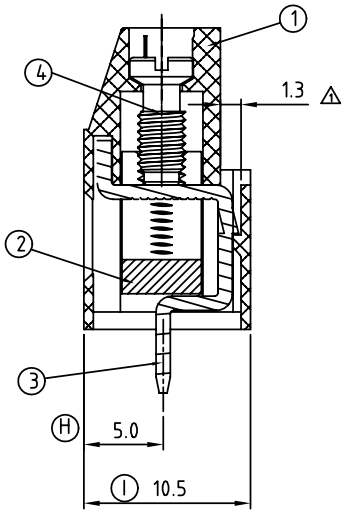

Electrical	cULus	VDE
Voltage rating: 300VAC		450V
Current rating: 20A		24A
Wire range :		0.2-2.5mm²
Solid wire(AWG): 12-30		
Stranded wire(AWG): 12-30		
Torque(Lb-In): 3.5		0.5 N.m
Screw: M3		
Wire strip length: 6-7mm		
Withstanding Voltage: 1.6KV		2.5KV
Operating temperature: -40°C to +115°C		
Soldering temperature: 250°C±10°C/5 Sec		
Safety Approval:		

VJ xx 21 x 2 xxxx G

- xx: No. of poles end stackable sesign
  - 02 2 CONTACTS
  - 03 3 CONTACTS
  - ... ...
  - 24 24 CONTACTS
- x: 0 Black (RAL9005); 2 Red (RAL3001/D); 3 Orange(RAL2011/P); 4 Yellow(RAL1018/A); 5 Green(RAL6018/T); 6 Blue (RAL5015/A); 8 Grey(RAL7035/D)
- xxxx: 0000:"@"Logo (Standard); 000A:"ANYTEK"Logo; Any special item by customer request, please contact sales department.
- G: RoHS Pb<40,000ppm

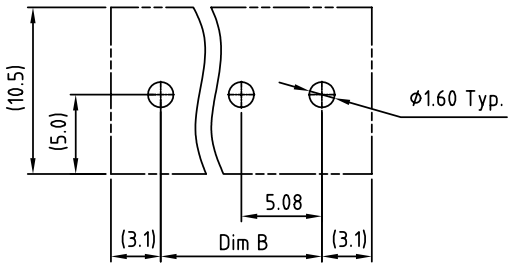

P.C.B LAYOUT

ANYTEK

CUSTOMER COPY

ALL RIGHTS RESERVED. REPRODUCTION OR ISSUE TO THIRD PARTIES IN ANY FORM WHATEVER IS NOT PERMITTED WITHOUT WRITTEN AUTHORITY FROM THE PROPRIETOR. PROPERTY OF ANYTEK TECHNOLOGY CO., LTD

TITLE	VJ-5.08 Series 2P-24P Horizontal (180D wire inlet)------Without cover				
PART NO.	VJxx21x2xxxxG			DWG NO.	8VJ0103
APPROVED	CHECKED	DESIGNED	DRAWN	CUST NO.	
		Aaron 2010.11.09	Marvin 2008.06.04	SHEET: 01/01	UNIT: mm; SCALE: NONE; REV.: F

Tolerance	
X.	±0.50
X.X	±0.30
X.XX	±0.10
X°	±1°