SIGN	DATE	DESCRIPTION	APPROVER
1	3/30'09	Structure changed	JODY
2	3/30'09	Temperature changed from -40~105°C to -40~115°C	JODY
3	11/13'12	Change the screw plating specification	Jacky
4	11/13'12	Change the dimensional tolerance	Jacky

THIS IS CAD DRAWING, DO NOT REVISE MANUALLY!!!

N=Number of contacts

Dimension A&B&C

DIM A	N×10.0+3.5
DIM B	(N-1)×10.0
DIM C	(N+2)×10.0

4

Poles \ Tol.	Dim A&B&C
4p	±0.20
5-10p	±0.30
11-24p	±0.40
25-30p	±0.50

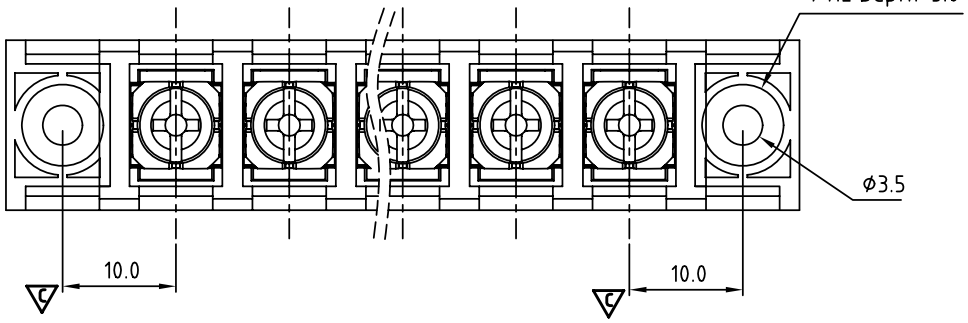

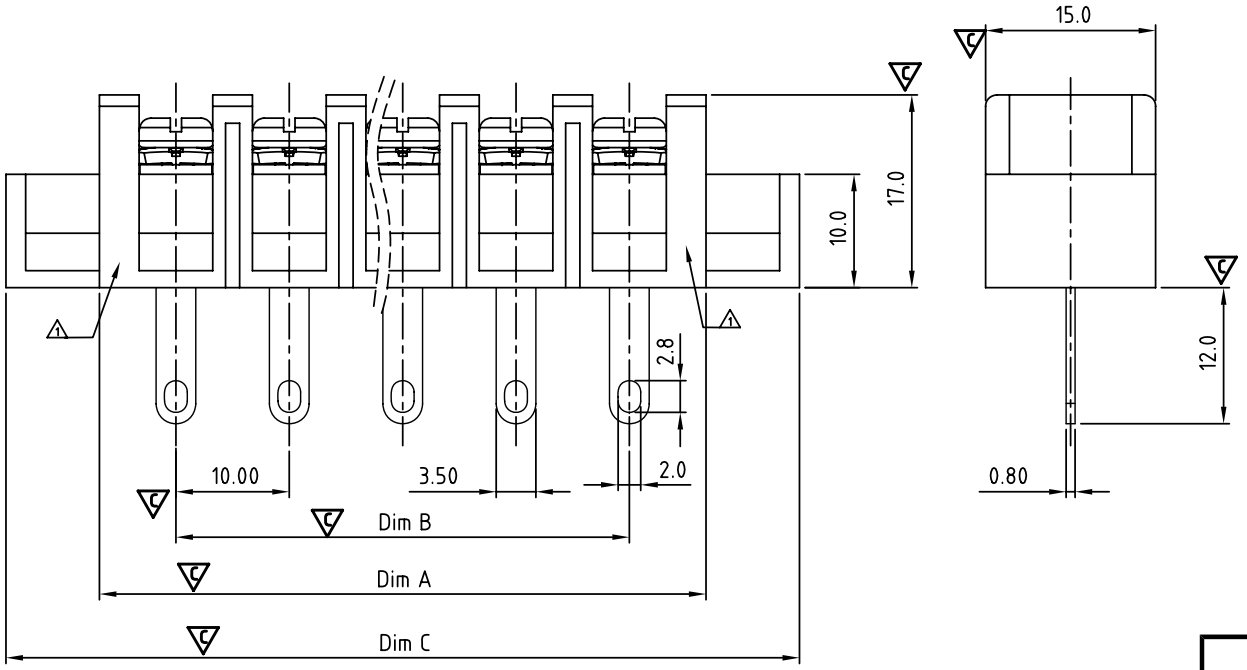

MATERIALS ELECTRICAL

RATED VOLTAGE & CURRENT:	300 V, 20 A
WITHSTAND VOLTAGE:	AC 2000 V/Min
INSULATION RESISTANCE:	1000 MΩ OR MORE AT DC 500 V
OPERATING TEMPERATURE RANG:	2 -40 °C ~+115 °C
SCREW TORQUE VALUE:	12Lb-In.
WIRE RANGE:	22 - 12 AWG
1) MOLDED PARTS:	POLYMIDE 66, UL 94 V-0 BLACK
2) TERMINAL:	BRASS, 0.8t, Tin PLATED
3 3) TERMINAL SCREWS:	STEEL, M3.5

APPROVAL: c UL us

Critical dimension: C

PART No.:

YK 603 xx 3 x x 00G

NO. OF POLES
- 04: 4 POLES
- 05: 5 POLES
- 06: 6 POLES
- ⋮
- 30: 30 POLES

MARK
- 0: "@" MARK
- 1: "ANY" MARK

TERMINAL & SCREW PLATED
- 0: TERMINAL & SCREW: G/F
- 3 1: TERMINAL: G/F, SCREW: Zinc
- 2: TERMINAL: Sn, SCREW: G/F
- 3 3: TERMINAL: Sn, SCREW: Zinc

G:RoHS compliant(lead<4%) in copper alloy

ANYTEK

CUSTOMER COPY

ALL RIGHTS RESERVED. REPRODUCTION OR ISSUE TO THIRD PARTIES IN ANY FORM WHATEVER IS NOT PERMITTED WITHOUT WRITTEN AUTHORITY FROM THE PROPRIETOR. PROPERTY OF ANYTEK TECHNOLOGY CO., LTD

TITLE	YK-603 With Flange&W/O Cover Series(4-30P)					
PART NO.	YK603xx3xx00G			DWG NO.	8YK0003-603	
APPROVED	CHECKED	DESIGNED	DRAWN	CUST NO.		Tolerance
		Jacky 2012.11.13	Jacky 2012.11.13		UNIT: mm	X. ±0.50
					SCALE: NONE	X.X ±0.30
				SHEET: 01/01	REV.: D	X.XX ±0.10
						X° ±1°