RoHS
Available on commercial versions

1500 WATT BIDIRECTIONAL TRANSIENT VOLTAGE SUPPESSOR

Qualified per MIL-PRF-19500/507

Qualified Levels:
JAN, JANTX, and JANTXV

DESCRIPTION

This popular Transient Voltage Suppressor (TVS) series for 1N6036 thru 1N6072A are JEDEC registered selections for bidirectional devices. All have the same high Peak Pulse Power rating of 1500 W with extremely fast response times. They are also available in military qualified selections as described in the "Features" section herein. They are most often used for protecting against transients from inductive switching environments, induced RF effects, or induced secondary lightning effects as found in lower surge levels of IEC61000-4-5. They are also very successful in protecting airborne avionics and electrical systems. Since their response time is virtually instantaneous, they can also protect from ESD and EFT per IEC61000-4-2 and IEC61000-4-4.

Important: For the latest information, visit our website http://www.microsemi.com.

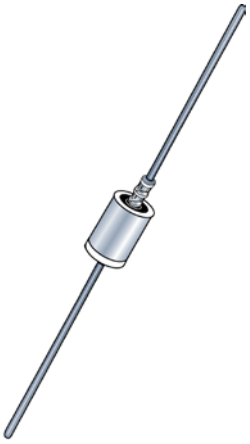

DO-13 (DO-202AA) Package

FEATURES

- Bidirectional TVS series in axial packages for thru-hole mounting.
- Suppresses transients up to 1500 watts @ 10/1000 µs (see Figure 1).
- Clamps transients in less than 100 pico seconds.
- Working voltage (V_{WM}) range 5.5 V to 185 V.
- Hermetically sealed DO-13 metal package.
- JAN, JANTX, JANTXV military qualifications also available per MIL-PRF-19500/507 for the tighter tolerance "A" suffix types by adding the JAN, JANTX, or JANTXV prefix, e.g. JANTXV1N6036A, etc.
- RoHS compliant versions available (commercial grade only).

APPLICATIONS / BENEFITS

- Protection from switching transients and induced RF.
- Protection from ESD & EFT per IEC 61000-4-2 and IEC 61000-4-4.
- Secondary lightning protection per IEC61000-4-5 with 42 Ohms source impedance:
  - Class 1: 1N6036 to 1N6072A
  - Class 2: 1N6036 to 1N6067A
  - Class 3: 1N6036 to 1N6061A
  - Class 4: 1N6036 to 1N6054A
- Secondary lightning protection per IEC61000-4-5 with 12 Ohms source impedance:
  - Class 1: 1N6036 to 1N6064A
  - Class 2: 1N6036 to 1N6057A
  - Class 3: 1N6036 to 1N6049A
  - Class 4: 1N6036 to 1N6042A
- Secondary lightning protection per IEC61000-4-5 with 2 Ohms source impedance:
  - Class 2: 1N6036 to 1N6048A
  - Class 3: 1N6036 to 1N6041A
- Inherently radiation hard as described in Microsemi "MicroNote 050".

Also available in:

DO-13 package
(unidirectional)
1N5629 – 1N5665A

Case 1 package
(plastic equivalent)
1.5KE6.8C – 1.5KE220CA

DO-215AB package
(Gull-wing)
SMCG5.0 – SMCG170A

DO-214AB package
(J-bend)
SMCJ5.0 – SMCJ170A

MSC – Lawrence
6 Lake Street,
Lawrence, MA 01841
Tel: 1-800-446-1158 or
(978) 620-2600
Fax: (978) 689-0803

MSC – Ireland
Gort Road Business Park,
Ennis, Co. Clare, Ireland
Tel: +353 (0) 65 6840044
Fax: +353 (0) 65 6822298

Website:
www.microsemi.com

©2012 Microsemi Corporation

MAXIMUM RATINGS

Parameters/Test Conditions	Symbol	Value	Unit
Junction and Storage Temperature	T_J and T_{STG}	-55 to +175	ºC
Peak Pulse Power @ T_L = +25 ºC (1)	P_{PP}	1500	W
Rated Average Power Dissipation @ T_L ≤ +125 ºC (2)	$P_{M(AV)}$	1	W
Solder Temperature @ 10 s	T_{SP}	260	°C

Notes: 1. At 10/1000 us with repetition rate of 0.01% or less (see Figures 1, 2, & 4).
2. At 10 mm from body (see derating in Figure 3 and note below).

MECHANICAL and PACKAGING

- CASE: DO-13 (DO-202AA), welded, hermetically sealed metal and glass.
- TERMINALS: All external metal surfaces are tin-lead plated and solderable per MIL-STD-750 method 2026.
- MARKING: Part number.
- POLARITY: Not applicable for bidirectional TVS.
- TAPE & REEL option: Standard per EIA-296 (add "TR" suffix to part number). Consult factory for quantities.
- WEIGHT: Approx 1.4 grams.
- See Package Dimensions on last page.

PART NOMENCLATURE

JAN 1N6036 A (e3)

Reliability Level
JAN = JAN level
JANTX = JANTX level
JANTXV = JANTXV level
(All of the above require "A" suffix)
Blank = Commercial

JEDEC type number
(See Electrical Characteristics table)

RoHS Compliance
e3 = RoHS compliant (available on commercial grade only)
Blank = non-RoHS compliant

Voltage Tolerance
A = 5%
Blank = 10%

SYMBOLS & DEFINITIONS

Symbol	Definition
V_{WM}	Standoff Voltage: Applied Reverse Voltage to assure a nonconductive condition.
$V_{(BR)}$	Breakdown Voltage: This is the Breakdown Voltage the device will exhibit at 25 °C.
V_C	Maximum Clamping Voltage: The maximum peak voltage appearing across the TVS when subjected to the peak pulse current in a one millisecond time interval. The peak pulse voltage is the combination of voltage rise due to both the series resistance and thermal rise and positive temperature coefficient ($\alpha_{V(BR)}$).
I_{PP}	Peak Pulse Current: The peak current during the impulse. (See Figure 2)
P_{PP}	Peak Pulse Power: The pulse power as determined by the product of V_C and I_{PP}.
I_D	Standby Current: The current at the standoff voltage (V_{WM}).
$I_{(BR)}$	Breakdown Current: The current used for measuring Breakdown Voltage ($V_{(BR)}$).

©2012 Microsemi Corporation

ELECTRICAL CHARACTERISTICS @ 25 °C (Test Both Polarities)

JEDEC Type No.	Rated Standoff Voltage V_{WM}	Breakdown Voltage $V_{(BR)}$ $V_{(BR)min}$	$V_{(BR)max}$	@ $I_{(BR)}$	Maximum Clamping Voltage V_C @ I_{PP}	Maximum Standby Current I_D @ V_{WM}	Maximum Peak Pulse Current I_{PP} (See Fig. 2)	Maximum Temperature Coefficient of $V_{(BR)}$
	Volts	Volts	Volts	mA	Volts	µA	Amps	$\alpha_{V(BR)}$ %/°C
1N6036	5.5	6.75	8.25	10	11.7	1000	128	.061
*1N6036A	6.0	7.13	7.88	10	11.3	1000	132	.061
1N6037	6.5	7.38	9.02	10	12.5	500	120	.065
*1N6037A	7.0	7.79	8.61	10	12.1	500	124	.065
1N6038	7.0	8.19	10.00	10	13.8	200	109	.068
*1N6038A	7.5	8.65	9.55	10	13.4	200	112	.068
1N6039	8.0	9.0	11.0	1	15.0	50	100	.073
*1N6039A	8.5	9.5	10.5	1	14.5	50	103	.073
1N6040	8.5	9.9	12.1	1	16.2	10	93	.075
*1N6040A	9.0	10.5	11.6	1	15.6	10	96	.075
1N6041	9.0	10.8	13.2	1	17.3	5	87	.078
*1N6041A	10.0	11.4	12.6	1	16.7	5	90	.078
1N6042	10.0	11.7	14.3	1	19.0	5	79	.081
*1N6042A	11.0	12.4	13.7	1	18.2	5	82	.081
1N6043	11.0	13.5	16.5	1	22.0	5	68	.084
*1N6043A	12.0	14.3	15.8	1	21.2	5	71	.084
1N6044	12.0	14.4	17.5	1	23.5	5	64	.086
*1N6044A	13.0	15.2	16.8	1	22.5	5	67	.086
1N6045	14.0	16.2	19.8	1	26.5	5	56.5	.088
*1N6045A	15.0	17.1	18.9	1	25.2	5	59.5	.088
1N6046	16.0	18.0	22.0	1	29.1	5	51.5	.090
*1N6046A	17.0	19.0	21.0	1	27.7	5	54	.090
1N6047	17.0	19.8	24.2	1	31.9	5	47	.092
*1N6047A	18.0	20.9	23.1	1	30.6	5	49	.092
1N6048	19.0	21.6	26.4	1	34.7	5	43	.094
*1N6048A	20.0	22.8	25.2	1	33.2	5	45	.094
1N6049	21.0	24.3	29.7	1	39.1	5	38.5	.095
*1N6049A	22.0	25.7	28.4	1	37.5	5	40	.096
1N6050	24.0	27.0	33.0	1	43.5	5	34.5	.097
*1N6050A	25.0	28.5	31.5	1	41.4	5	36	.097
1N6051	26.0	29.7	36.3	1	47.7	5	31.5	.098
*1N6051A	28.0	31.4	34.7	1	45.7	5	33	.098
1N6052	29.0	32.4	39.6	1	52.0	5	29	.099
*1N6052A	30.0	34.2	37.8	1	49.9	5	30	.099
1N6053	31.0	35.1	42.9	1	56.4	5	26.5	.100
*1N6053A	33.0	37.1	41.0	1	53.9	5	28	.100
1N6054	34.0	38.7	47.3	1	61.9	5	24	.101
*1N6054A	36.0	40.9	45.2	1	59.3	5	25.3	.101
1N6055	38.0	42.3	51.7	1	67.8	5	22.2	.101
*1N6055A	40.0	44.7	49.4	1	64.8	5	23.2	.101
1N6056	41.0	45.9	56.1	1	73.5	5	20.4	.102
*1N6056A	43.0	48.5	53.6	1	70.1	5	21.4	.102
1N6057	45.0	50.4	61.6	1	80.5	5	18.6	.103
*1N6057A	47.0	53.2	58.8	1	77.0	5	19.5	.103
1N6058	48.0	55.8	68.2	1	89.0	5	16.9	.104
*1N6058A	53.0	58.9	65.1	1	85.0	5	17.7	.104
1N6059	55.0	61.2	74.8	1	98.0	5	15.3	.104
*1N6059A	58.0	64.6	71.4	1	92.0	5	16.3	.104
1N6060	60.0	67.5	82.5	1	108.0	5	13.9	.105
*1N6060A	64.0	71.3	78.8	1	103.0	5	14.6	.105
1N6061	66.0	73.8	90.2	1	118.0	5	12.7	.105
*1N6061A	70.0	77.9	86.1	1	113.0	5	13.3	.105

©2012 Microsemi Corporation

ELECTRICAL CHARACTERISTICS @ 25 °C (Test Both Polarities)

JEDEC Type No.	Rated Standoff Voltage V_{WM}	Breakdown Voltage $V_{(BR)}$ $V_{(BR)min}$	$V_{(BR)max}$	@ $I_{(BR)}$	Maximum Clamping Voltage V_C @ I_{PP}	Maximum Standby Current I_D @ V_{WM}	Maximum Peak Pulse Current I_{PP} (See Fig. 2)	Maximum Temperature Coefficient of $V_{(BR)}$
	Volts	Volts	Volts	mA	Volts	µA	Amps	$\alpha_{V(BR)}$ %/°C
1N6062	73.0	81.9	100.0	1	131.0	5	11.4	.106
*1N6062A	75.0	86.5	95.5	1	125.0	5	12.0	.106
1N6063	81.0	90.0	110.0	1	144.0	5	10.4	.106
*1N6063A	82.0	95.0	105.0	1	137.0	5	11.0	.106
1N6064	90.0	99.0	121.0	1	158.0	5	9.5	.107
*1N6064A	94.0	105.0	116.0	1	152.0	5	9.9	.107
1N6065	95.0	108.0	132.0	1	176.0	5	8.5	.107
*1N6065A	100.0	114.0	126.0	1	168.0	5	8.9	.107
1N6066	105.0	117.0	143.0	1	191.0	5	7.8	.107
*1N6066A	110.0	124.0	137.0	1	182.0	5	8.2	.107
1N6067	121.0	135.0	165.0	1	223.0	5	6.7	.108
*1N6067A	128.0	143.0	158.0	1	213.0	5	7.0	.108
1N6068	137.0	153.0	187.0	1	258.0	5	5.8	.108
*1N6068A	145.0	162.0	179.0	1	245.0	5	6.1	.108
1N6069	145.0	162.0	198.0	1	274.0	5	5.5	.108
*1N6069A	150.0	171.0	189.0	1	261.0	5	5.7	.108
1N6070	155.0	171.0	210.0	1	292.0	5	5.1	.108
*1N6070A	160.0	181.0	200.0	1	278.0	5	5.4	.108
1N6071	165.0	180.0	220.0	1	308.0	5	4.9	.108
*1N6071A	170.0	190.0	210.0	1	294.0	5	5.1	.108
1N6072	175.0	198.0	242.0	1	344.0	5	4.3	.108
*1N6072A	185.0	209.0	231.0	1	328.0	5	4.6	.108

* Also available in military qualified types by adding the prefix JAN, JANTX or JANTXV per MIL-PRF-19500/507.

©2012 Microsemi Corporation

GRAPHS

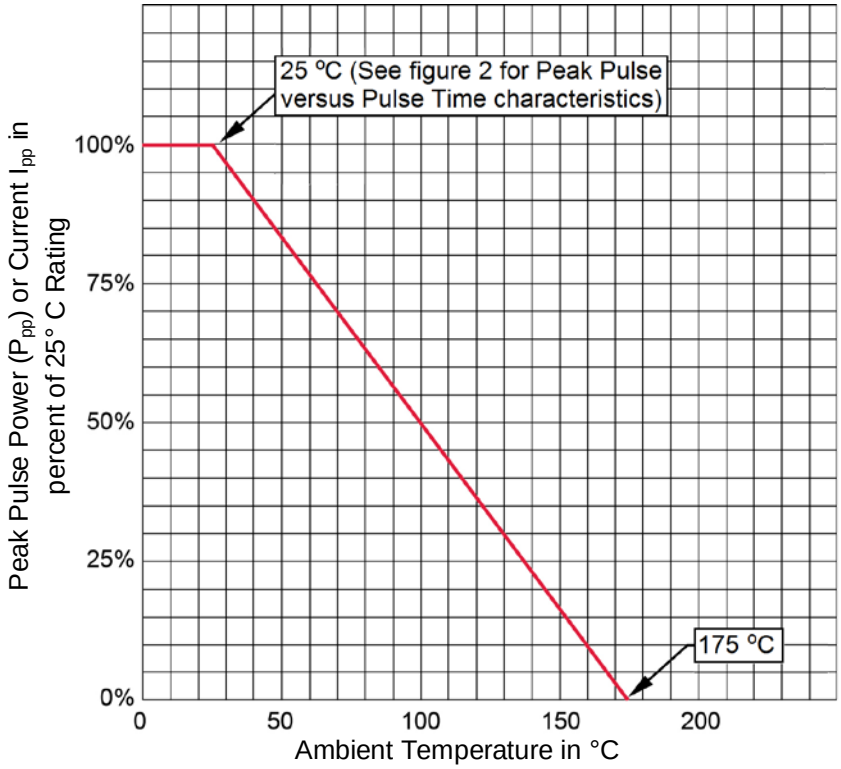

FIGURE 1
Derating Curve

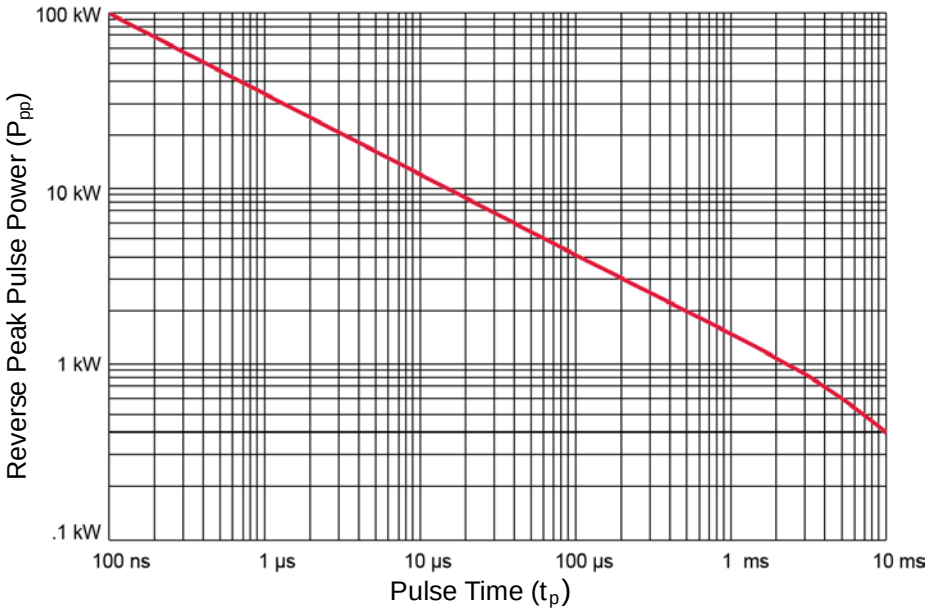

FIGURE 2
Peak Pulse Power versus Pulse Time

©2012 Microsemi Corporation

GRAPHS

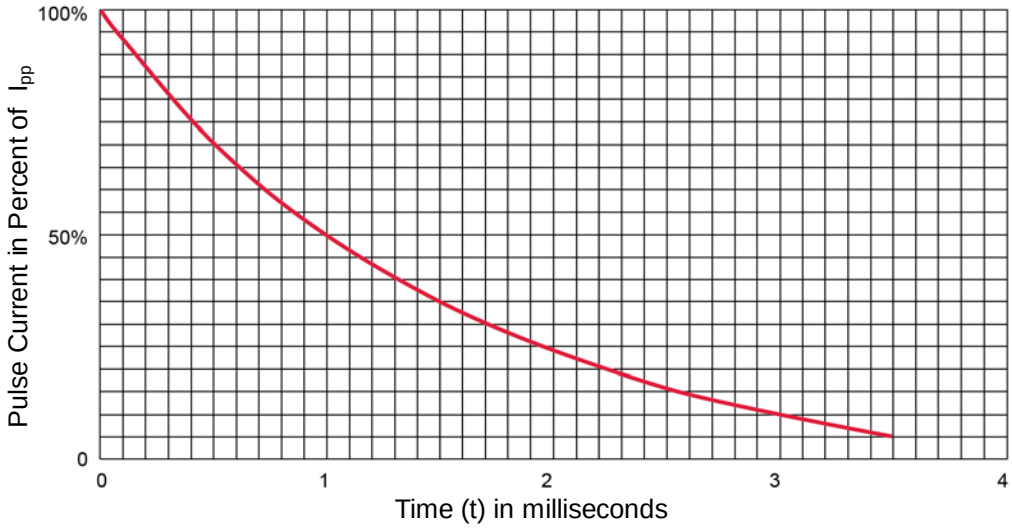

FIGURE 3
Current impulse waveform (I_{PP} = 10 µs)

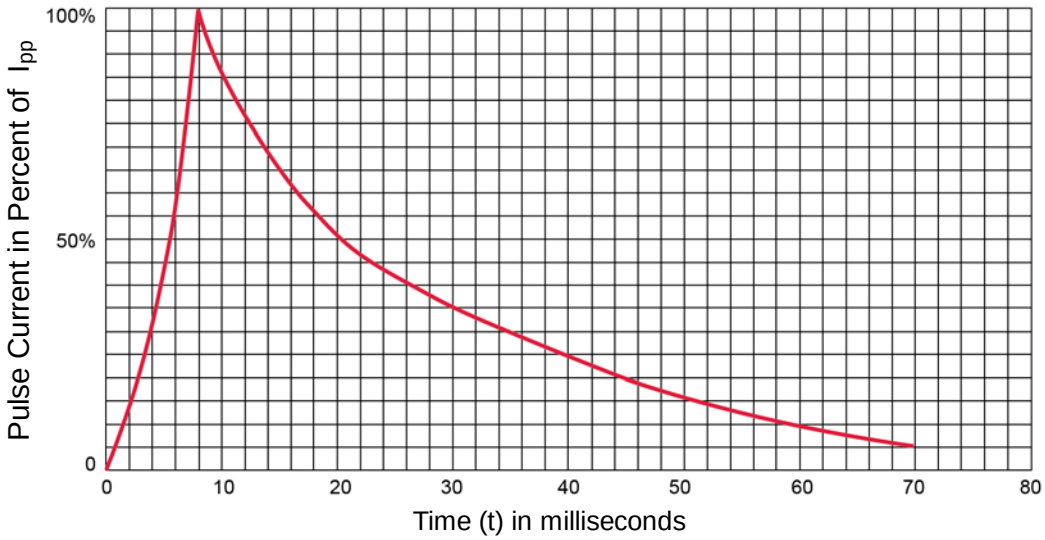

FIGURE 4
Current impulse waveform (I_{PP} = 8 µs).

©2012 Microsemi Corporation

PACKAGE DIMENSIONS

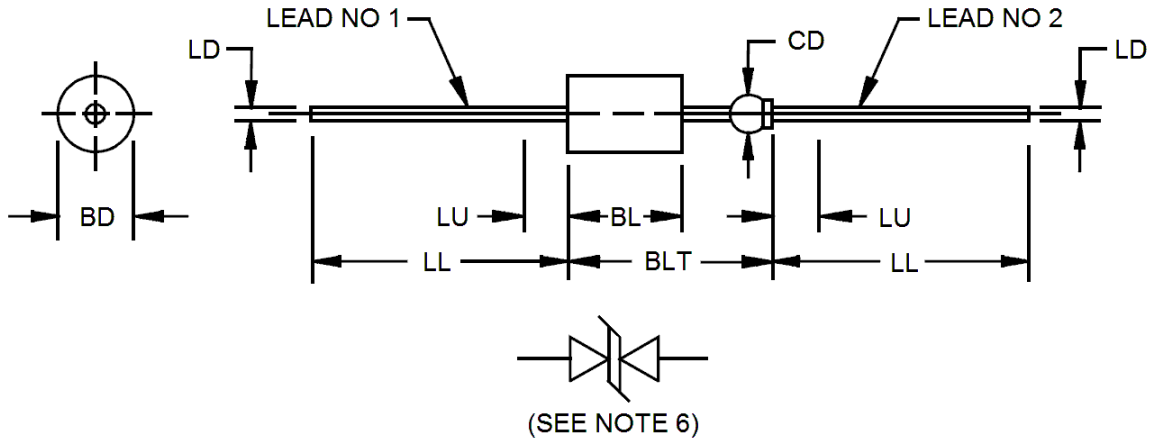

NOTES:

1 Dimensions are in inches.
2 Millimeter equivalents are given for general information only.
3 The major diameter is essentially constant along its length.
4 Within this zone, diameter may vary to allow for lead finishes and irregularities.
5 Dimension to allow for pinch or seal deformation anywhere along tubulation.
6 Symbol for bidirectional transient suppressor.
7 Lead 1 shall be electrically connected to the case.
8 In accordance with ASME Y14.5M, diameters are equivalent to Φx symbology.

Symbol	Dimensions				Notes
	Inches		Millimeters		
	Min	Max	Min	Max	
BD	.215	.235	5.46	5.97	
BL	.293	.357	7.44	9.07	3
BLT		.570		14.48	
CD	.045	.100	1.14	2.54	5
LD	.025	.035	0.64	0.89	
LL	1.000	1.625	25.40	41.28	
LU		.188		4.78	4

©2012 Microsemi Corporation