SIGN	DATE	DESCRIPTION	APPROVER
⚠			

THIS IS CAD DRAWING, DO NOT REVISE MANUALLY!!!

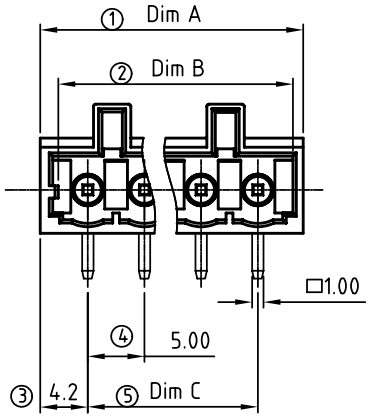

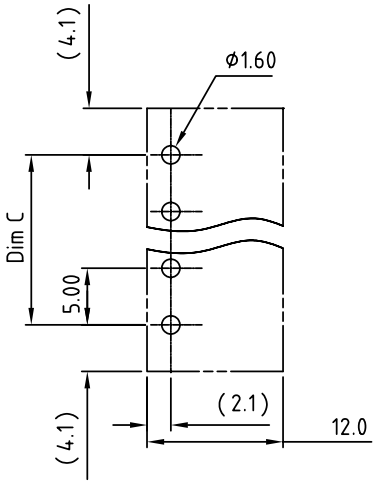

P.C.B LAYOUT

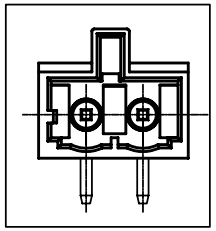

2P mark

Material:

- Item a :Male contact pin: Copper Tin plated
- Item b :Terminal(housing): Thermoplastic (UL94V-0)

Electrical:	cULus
Voltage rating:	300V
Current rating:	8A
Withstanding Voltage:	1.6 KV
Operating temperature:	-40°C to +115°C
Soldering temperature:	250°C±10°C/5 Sec
Safety Approval:	c us

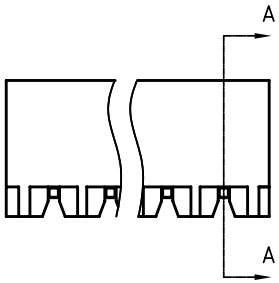

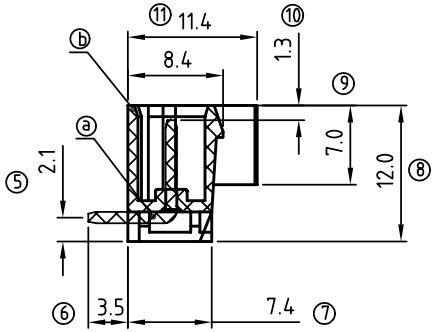

SECTION A-A

NC xx 7 2 x 1 xxxx G

02	2 poles
03	3 poles
...	...
24	24 poles

0	Black (RAL9005)
2	Red (RAL3001/D)
3	Orange(RAL2011/P)
4	Yellow(RAL1018/A)
5	Green(RAL6018/T)
6	Blue (RAL5015/A)
8	Grey(RAL7035/D)

any special item by customer request, please contact sales department.

G: Pb<40,000ppm

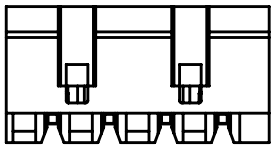

N = Number of poles
Dim A=Nx5.0+3.2
Dim B=Nx5.0+0.7
Dim C=(N-1)x5.0

	Dim A	Dim B	Dim C
2-6p	±0.20	$^{+0.15}_{-0}$	±0.20
6-12p	±0.30	$^{+0.3}_{-0}$	±0.30
12-24p	±0.40	$^{+0.4}_{-0}$	±0.40

ANYTEK

CUSTOMER COPY

ALL RIGHTS RESERVED. REPRODUCTION OR ISSUE TO THIRD PARTIES IN ANY FORM WHATEVER IS NOT PERMITTED WITHOUT WRITTEN AUTHORITY FROM THE PROPRIETOR. PROPERTY OF ANYTEK TECHNOLOGY CO., LTD

TITLE	NC 5.0mm Right-angle W/hook holder (100% protected against mismating)				
PART NO.	NCxx72x1xxxxG			DWG NO.	8NC0004
APPROVED	CHECKED	DESIGNED	DRAWN	CUST NO.	
		Runner 2010.08.11	Runner 2010.08.11	UNIT: mm / SCALE: 2/1 / SHEET: 01/01 / REV.: B	

Tolerance	
X.	±0.50
X.X	±0.30
X.XX	±0.10
X°	±1°