Series 39 EMI+Environmental Backshells

for AS50151 Crimp, M26482 Series II, M83723 Series III, AS95234

390A*053 EMI+Environmental Backshell, Spin Coupling

Shielded. Environmental. 390A*053 backshell fits **AS50151 crimp (MS3450), AS95234, MIL-DTL-26482 Series II, MIL-DTL-83723 Series III** connectors. Spin coupling. Two ground rings for terminating individual and overall braid shields. Type H heavy duty saddle clamp has stainless steel telescoping fillister head screws and lockwashers. Available in aluminum or stainless steel. Silicone O-ring and cable grommet.

Adapter Code A

AS50151 crimp, AS95234, MIL-DTL-26482 Ser. II, MIL-DTL-83723 Ser. III

PROFILE SELECTION GUIDE

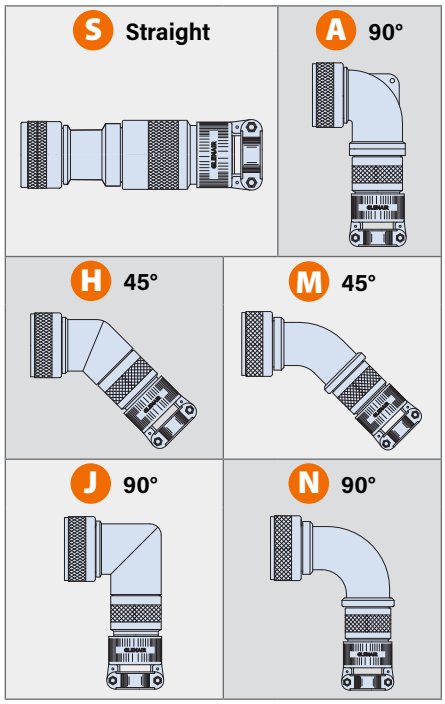

PART NUMBER

390AS053 NF 18 10 H 3

Base P/N

Base Part No.	Profile	Shell Size
390AS053	S Straight	08-28
390AA053	A 90° Low Profile	08-28
390AH053	H 45° Cut/Weld	08-24
390AJ053	J 90° Cut/Weld	08-24
390AM053	M 45° Full Radius	08-28
390AN053	N 90° Full Radius	08-28

Material/Finish

M	Alum/ Electroless Nickel
MT	Alum/ Nickel-PTFE
NF	Alum/ Olive Drab Cadmium
ZR	Alum/ Black Zinc-Nickel
TZ	Alum/ Tin-Zinc
Z1	SST/ Passivated *(Profiles H, J, M, N, S only)*

Shell Size

08 10 12 14 16 18 20 22 24 28

Entry Size

Entry Size	Max. Cable Dia.	Shell Size*	Entry Size	Max. Cable Dia.	Shell Size*
03	.250 (7.9)	08-28	16	.937 (23.8)	22-28
04	.312 (7.9)	10-28	20	1.250 (31.8)	28
06	.437 (11.1)	12-28	24	1.375 (34.9)	28
08	.562 (14.3)	14-28	28	1.625 (41.3)	-
10	.625 (15.9)	16-28	32	1.875 (47.6)	-
12	.750 (19.1)	18-28			

* *If selected entry size exceeds shell size range, a Style 2 transition adapter will be included.See Maximum Entry Size for details.*

Strain Relief

H	Saddle Clamp
D	Nut

Saddle Clamp

Nut

Length

3	1.5 inches
4	2.0 inches
6	3.0 inches
8	4.0 inches

Applies to Profile S only. If Entry Size is greater than "Maximum Entry Size" (see next page), then 2 inch minimum applies.

Shell Size	A Thread Class 2B	øB Max in	øB Max mm
08	0.500-20 UNF	.65	16.5
10	0.625-24 UNEF	.77	19.6
12	0.750-20 UNEF	.94	23.9
14	0.875-20 UNEF	1.07	27.2
16	1.000-20 UNEF	1.21	30.7
18	1.0625-18 UNEF	1.23	31.2
20	1.1875-18 UNEF	1.36	34.5
22	1.3125-18 UNEF	1.48	37.6
24	1.4375-18 UNEF	1.73	43.9
28	1.750-18 UNS	1.97	50.0

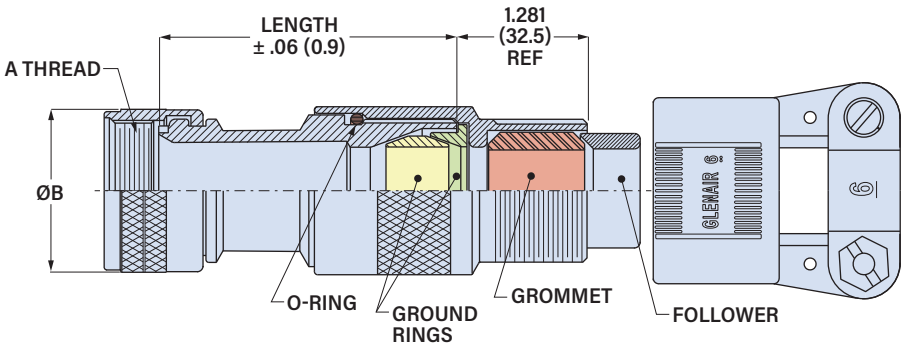

© 2022 Glenair, Inc • 1211 Air Way, Glendale, CA 91201 • 818-247-6000 • www.glenair.com • U.S. CAGE code 06324 • Circular Connector Accessories
Dimensions in Inches (millimeters) are subject to change without notice.

Series 39 EMI+Environmental Backshells

for AS50151 Crimp, M26482 Series II, M83723 Series III, AS95234

390A*053 EMI+Environmental Backshell, Spin Coupling

Profile A — Standard 90° Elbow

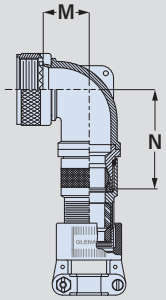

Profile H — Cut/Weld 45° Elbow

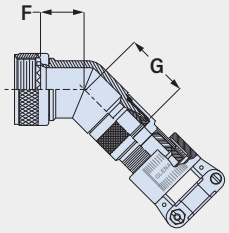

Profile J — Cut/Weld 90° Elbow

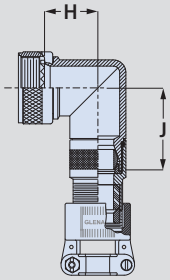

Profile M — Full Radius 45° Elbow

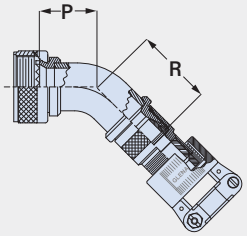

Profile N — Full Radius 90° Elbow

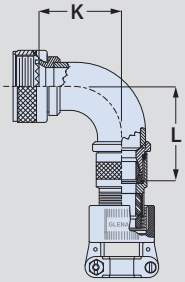

Shell Size	F Max in	F Max mm	G Max in	G Max mm	H Max in	H Max mm	J Max in	J Max mm	K Max in	K Max mm	L Max in	L Max mm	M Max in	M Max mm	N Max in	N Max mm	P Max in	P Max mm	R Max in	R Max mm
08	.639	16.2	1.031	26.2	.750	19.1	1.157	29.4	1.125	28.6	1.287	32.7	.500	12.7	1.420	36.1	.812	20.6	1.095	27.8
10	.664	16.9	1.063	27.0	.810	20.6	1.217	30.9	1.250	31.8	1.411	35.8	.595	15.1	1.540	39.1	.875	22.2	1.145	29.1
12	.688	17.5	1.094	27.8	.870	22.1	1.277	32.4	1.375	34.9	1.537	39.0	.610	15.5	1.560	39.6	.938	23.8	1.195	30.4
14	.705	17.9	1.119	28.4	.920	23.4	1.347	34.2	1.500	38.1	1.761	44.7	.700	17.8	2.154	54.7	1.000	25.4	1.245	31.6
16	.732	18.6	1.147	29.1	.980	24.9	1.407	35.7	1.625	41.3	1.787	45.4	.885	22.5	2.244	57.0	1.062	27.0	1.300	33.0
18	.748	19.0	1.157	29.4	1.020	25.9	1.427	36.2	1.750	44.5	1.911	48.5	.975	24.8	2.414	61.3	1.094	27.8	1.350	34.3
20	.773	19.6	1.177	29.9	1.080	27.4	1.487	37.8	1.875	47.6	2.037	51.7	.975	24.8	2.414	61.3	1.156	29.4	1.400	35.6
22	.800	20.3	1.217	30.9	1.140	29.0	1.567	39.8	2.000	50.8	2.161	54.9	1.125	28.6	2.587	65.7	1.188	30.2	1.455	37.0
24	.823	20.9	1.247	31.7	1.200	30.5	1.637	41.6	2.125	54.0	2.287	58.1	1.125	28.6	2.587	65.7	1.250	31.8	1.505	38.1
28	-	-	-	-	-	-	-	-	2.375	60.3	2.594	65.9	1.225	31.1	2.740	69.6	1.344	34.1	1.594	40.5

STRAIN RELIEF DIMENSIONS

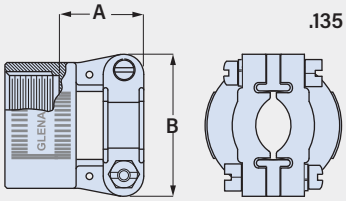

Saddle Clamp

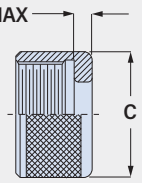

Nut

Entry Size	A Max in	A Max mm	B Max in	B Max mm	øC Max in	øC Max mm	Cable Range Min* in	Cable Range Min* mm	Cable Range Max in	Cable Range Max mm
03	.780	19.8	.957	24.3	.630	16.0	.125	3.2	.250	6.4
04	.780	19.8	.957	24.3	.755	19.2	.125	3.2	.312	7.9
06	.780	19.8	1.145	29.1	.942	23.9	.250	6.4	.437	11.1
08	.780	19.8	1.332	33.8	1.067	27.1	.312	7.9	.562	14.3
10	.780	19.8	1.332	33.8	1.192	30.3	.350	8.9	.625	15.9
12	.811	20.6	1.551	39.4	1.380	35.1	.500	12.7	.750	19.1
16	.905	23.0	1.770	45.0	1.535	39.0	.625	15.9	.937	23.8
20	1.092	27.7	2.113	53.7	1.848	46.9	.875	22.2	1.250	31.8
24	1.124	28.5	2.363	60.0	2.255	57.3	1.000	25.4	1.375	34.9
28	1.399	35.5	2.770	70.4	2.505	63.6	1.250	31.8	1.625	41.3
32	1.399	35.5	3.020	76.7	2.755	70.0	1.437	36.5	1.875	47.6

* Not applicable to Style D Nut.

MAXIMUM ENTRY SIZE

If the selected entry size exceeds the maximum size in this table, the backshell will have a front adapter. This is called a ***Style 2*** backshell.

Shell Size	Maximum Entry Size
08	03
10	04
12	06
14	08
16	10
18	12
20	12
22	16
24	16
28	24

Style 2 Straight Backshell

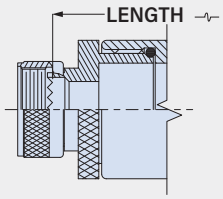

The minimum length code increases from 3 (1 ½ inches) to 4 (2 inches).

Style 2 45° and 90° Backshells

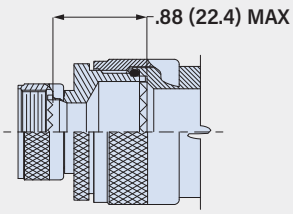

For 45° and 90° backshells, the length increases by .88 inches.