THIS COPY IS PROVIDED ON A RESTRICTED BASIS AND IS NOT TO BE USED IN ANY WAY DETRIMENTAL TO THE INTERESTS OF PANDUIT CORP.

PART NUMBER	FOR PANDUIT H-TAPS	DIMENSIONS IN INCHES		
		L	W	H
CLRCVR2-1	HTCT2-2-1	5.10	1.66	1.40

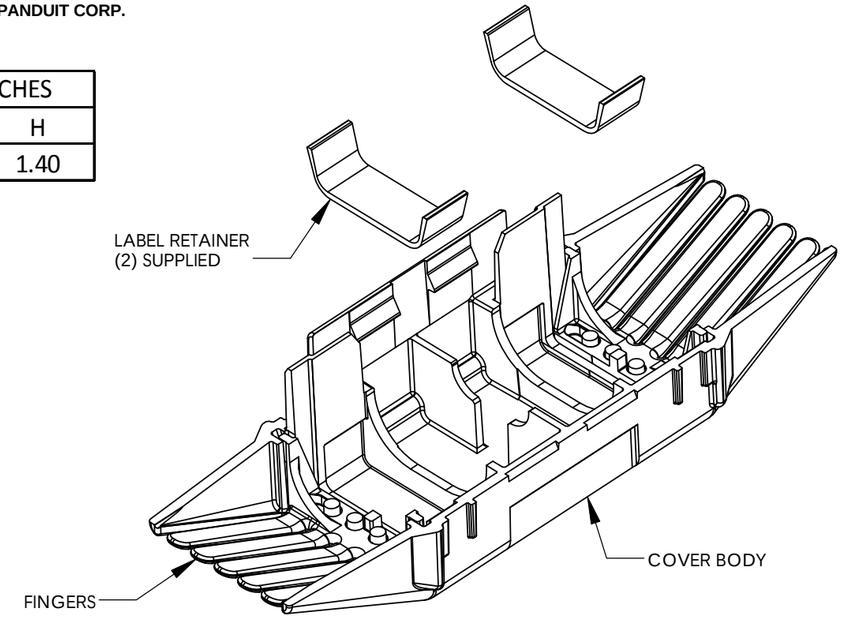

NOTES

1. MATERIAL:
   CLEAR POLYCARBONATE COVER BODY WITH BLACK POLYPROPYLENE FINGERS
   A. HIGH IMPACT STRENGTH
   B. U.V. RESISTANT
   C. FLAMMABILITY RATED (UL94 V-0)
   D. LIMITING OXYGEN INDEX (L.O.I.) = 28 MINIMUM
2. UL LISTED & CSA CERTIFIED:
   A. WHEN USED WITH SPECIFIED PANDUIT H-TAPS
   B. MAXIMUM TEMPERATURE RATING OF INSULATION MATERIAL: 90˚C
   C. VOLTAGE RATING OF COVER: 600V MAX.
3. COVER PART NUMBER INCLUDES TWO (2) COVER HALVES, TWO (2) MATTED SURFACE SNAP IN LABEL RETAINERS, AND TWO (2) CABLE TIES TO SUPPLEMENT THE MOLDED-IN LATCHES.

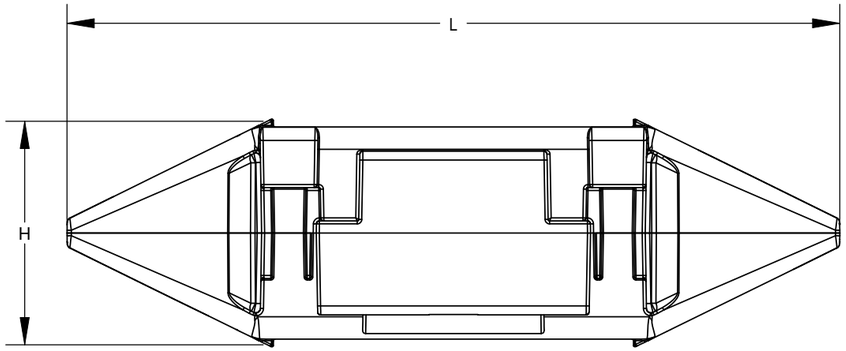

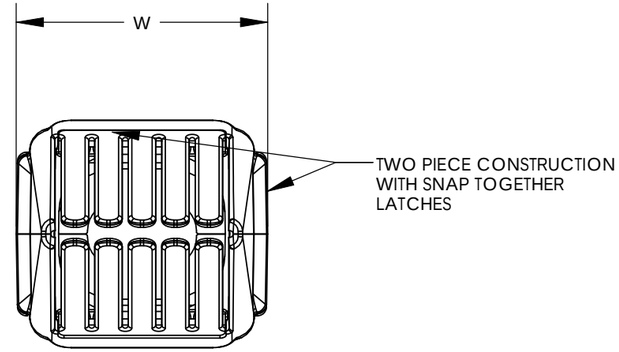

C UL US LISTED WIRE CONNECTOR

CSA CERTIFIED

REV	DATE	BY	CHK	DESCRIPTION	ECN	-R	SUP
01	12/10	JHNU	JHNU	CONVERTED DWG TO SOLIDWORKS REVISED AGENCY LOGO	N41473BC-C41473	FLD	FLD
00	12/04	JHNU	JHNU	DRAWING RELEASED			

PANDUIT CORP. TINLEY PARK, ILLINOIS

HTAP CLEAR COVER
(CLRCVR2)
CUSTOMER DRAWING

UNLESS OTHERWISE SPECIFIED DIMENSIONAL TOLERANCES ARE:
(.X) ± --- (.XXX) ± ---
(.XX) ± .06 ANGLES ± ---

UNLESS OTHERWISE SPECIFIED, ALL DIMENSIONS ARE GIVEN IN INCHES, THIRD ANGLE PROJECTION

DRAWN BY: JHNU
DATE: 12/04
CHK'D:
MAT'L: SEE NOTES
SCALE: NONE
DRAWING NO / CAD FILE: C41473_01
DWG SIZE: B