| SIGN | DATE | DESCRIPTION | APPROVER |
|---|---|---|---|
| 1 | 02/08'07 | Part No. is changed. | Aaron |
| 2 | 06/10'09 | The wire strip length changed from 6~7mm to 7~8mm. | Kind |
| 3 | 06/10'09 | The Operating tem. changed from -30°C~105°C to -40°C~115°C | Kind |
| 4 | 06/10'09 | Add the toleration table. | Kind |
| 5 | 11/21'09 | The normal grey No. changed from RAL7004/P to RAL7035/D | Kind |
| 6 | 03/13'10 | Add the 2P mark and Wire strip length is changed | RUNNER |

*THIS IS CAD DRAWING, DO NOT REVISE MANUALLY!!!*

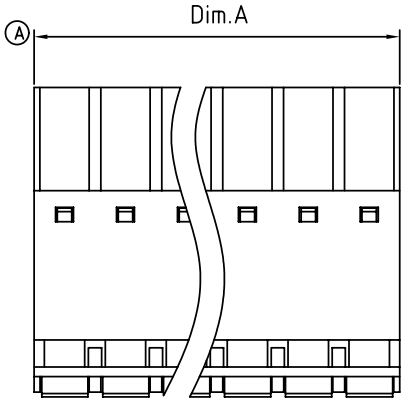


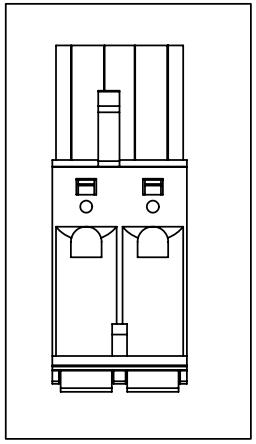

2P mark

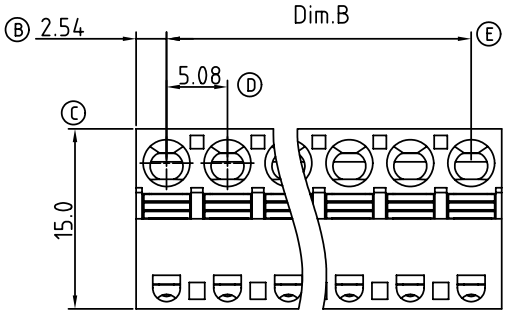


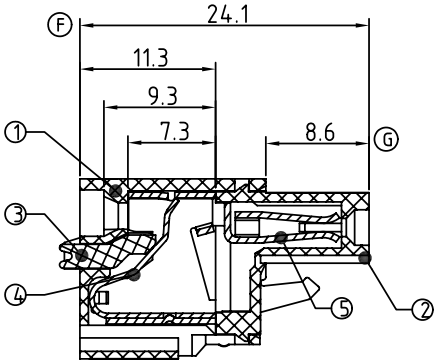


## Material

- Item 1 Terminal body:Thermoplastic ( UL94V-0 )
- Item 2 Terminal body:Thermoplastic ( UL94V-0 )
- Item 3 Terminal lever:Thermoplastic ( UL94V-0 )
- Item 4 Wire guard:Stainless Steel
- Item 5 Female contact :PhBz ( CuSn ) Tin plated

## Electrical cULus

- Voltage rating: 300V
- Current rating: 10A
- Solid wire(AWG):12-26
- Stranded wire(AWG):12-26
- 6 3 Wire strip length:8-9mm
- Withstanding Voltage:1.6KV
- 3 Operating temperature:-40°C to +115°C
- Safety Approval: c UL us

## PART NO.

HW xx 50 x 0 xxxx G 1 → RoHS Pb<40,000ppm

Poles
- 02 2 CONTACTS
- 03 3 CONTACTS
- ... ...
- 24 24 CONTACTS

Color
- 0 Black
- 5 Green ( RAL 6018/T )
- 6 Blue
- 5 8 Grey ( RAL 7035/D )

0000 Standard @ Logo
000A Standard ANY Logo
Any special item by customer request, please contact sales department.

4

| POLE | | 2 | 3 | 4 | 5 | 6 | 7 | 8 | 9 | 10 | 11 | 12 |
|---|---|---|---|---|---|---|---|---|---|---|---|---|
| A | | 10.16 | 15.24 | 20.32 | 25.40 | 30.48 | 35.56 | 40.64 | 45.72 | 50.80 | 55.88 | 60.96 |
| B | | 5.08 | 10.16 | 15.24 | 20.32 | 25.40 | 30.48 | 35.56 | 40.64 | 45.72 | 50.80 | 55.88 |
| Tol. | | ±0.15 | | | | | ±0.25 | | | | | |
| POLE | 13 | 14 | 15 | 16 | 17 | 18 | 19 | 20 | 21 | 22 | 23 | 24 |
| A | 66.04 | 71.12 | 76.20 | 81.28 | 86.36 | 91.44 | 96.52 | 101.60 | 106.68 | 111.76 | 116.84 | 121.92 |
| B | 60.96 | 66.04 | 71.12 | 76.20 | 81.28 | 86.36 | 91.44 | 96.52 | 101.60 | 106.68 | 111.76 | 116.84 |
| Tol. | | ±0.30 | | | | | ±0.40 | | | | | |

**ANYTEK**

**CUSTOMER COPY**

ALL RIGHTS RESERVED. REPRODUCTION OR ISSUE TO THIRD PARTIES IN ANY FORM WHATEVER IS NOT PERMITTED WITHOUT WRITTEN AUTHORITY FROM THE PROPRIETOR. PROPERTY OF ANYTEK TECHNOLOGY CO., LTD

| | | | | | |
|---|---|---|---|---|---|
| TITLE | HW-5.08 Series Contact on down side | | | | |
| PART NO. | HWxx50x0xxxxG | | | DWG NO. | 8HW0001 |
| APPROVED | CHECKED | DESIGNED | DRAWN | CUST NO. | |
| | | Runner 2010.04.06 | Kind 2009.06.30 | SHEET: 01/01 | UNIT: mm / SCALE: NONE / REV.: F |

| Tolerance | |
|---|---|
| X. | ±0.50 |
| X.X | ±0.30 |
| X.XX | ±0.10 |
| X° | ±1° |