SIGN	DATE	DESCRIPTION	APPROVER
1	02/16'12	Part No.is changed	Aaron
2			
3			
4			

THIS IS CAD DRAWING, DO NOT REVISE MANUALLY!!!

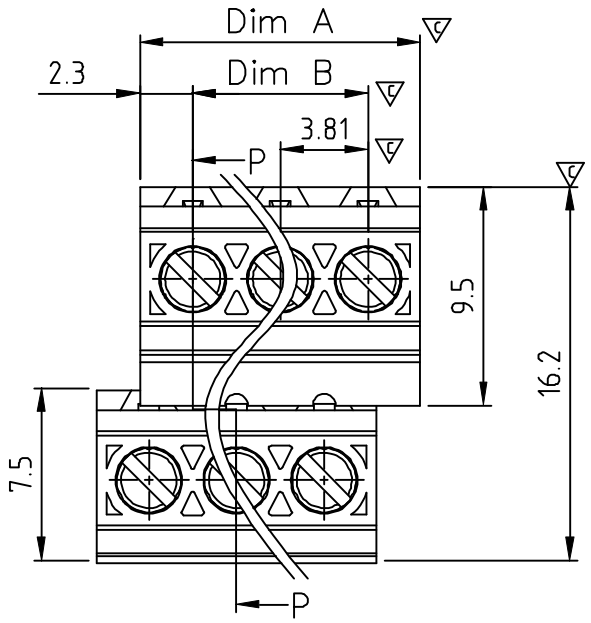

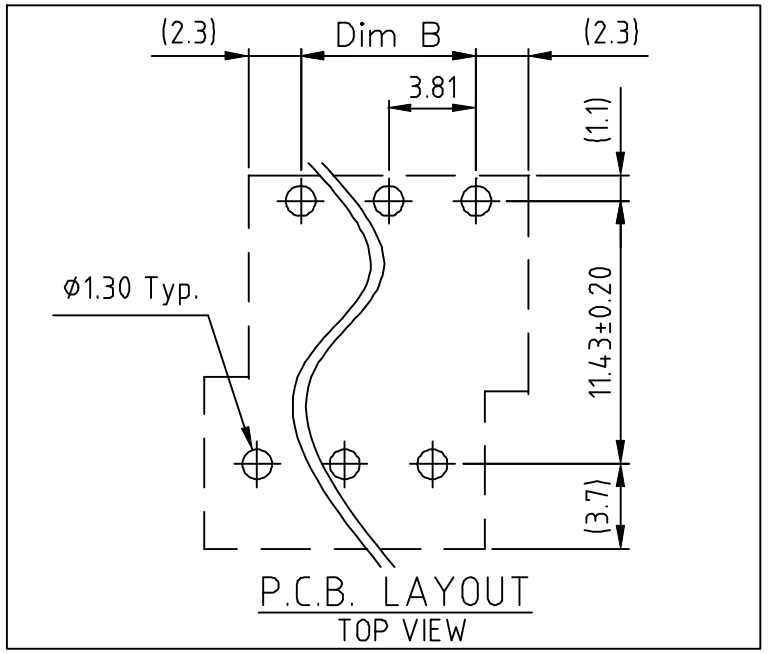

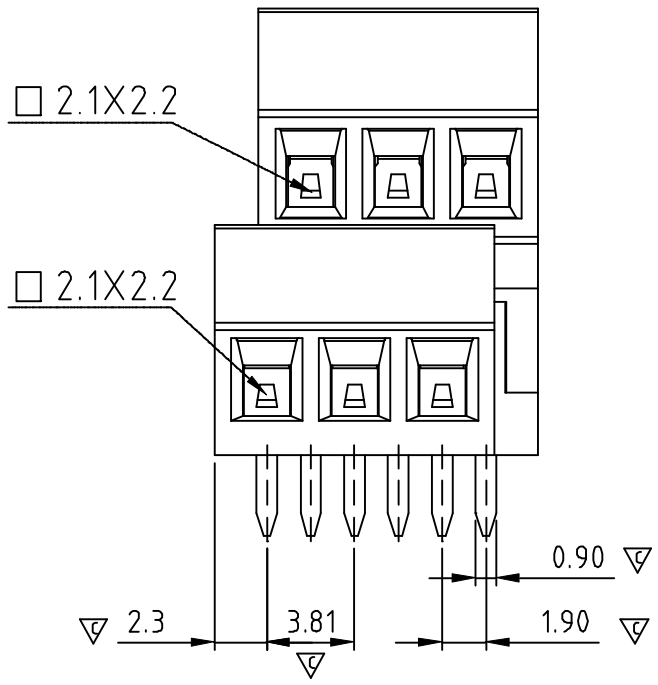

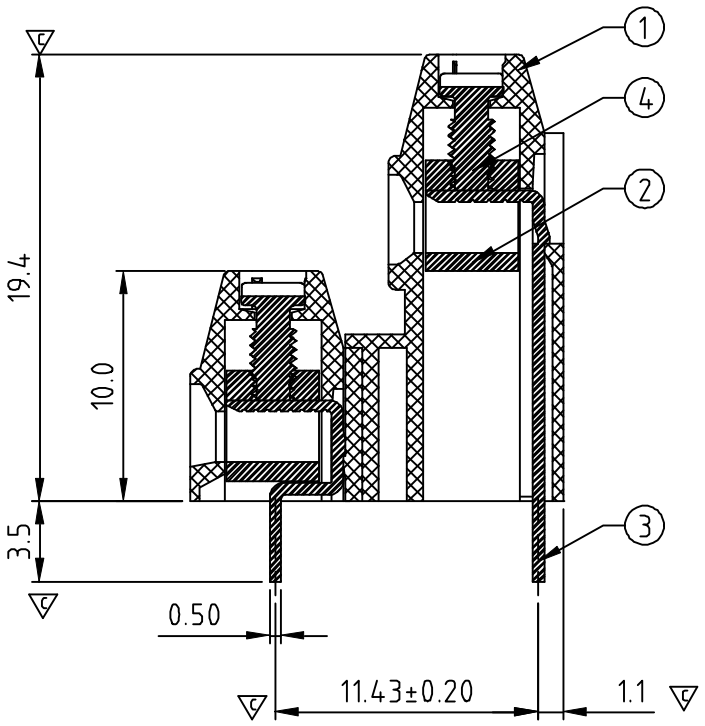

SECTION P-P

Material:

- Item 1 Terminal housing : Thermoplastic (UL 94V-0)
- Item 2 Clamp : Brass ,Ni plated
- Item 3 Wire guard solder pin : Brass ,Tin plated
- Item 4 Terminal screw: Steel Zinc plating"-"slot type

Electrical

- Voltage rating: 300VAC
- Current rating: 10A
- Wire range:
- Solid wire(AWG): 16-24
- Stranded wire(AWG): 16-24
- Torque(Lb-In): 1.7
- Screw: M2
- Wire strip length: 5-6mm
- Withstanding Voltage: 1.6KV
- Operating temperature: -40°C to +115°C
- Soldering temperature: 260°C±5°C/5 Sec
- Critical dimension:

⚠ YQ xx 41 x 0 A xxx G

No. of poles
04 2×2 CONTACTS
06 2×3 CONTACTS
... ...
48 2×24 CONTACTS

0 Black (RAL9005)
2 Red (RAL3001/D)
3 Orange(RAL2011/P)
4 Yellow(RAL1018/A)
5 Green(RAL6018/T)
6 Blue (RAL5015/A)
8 Grey(RAL7035/D)
9 White(RAL1102)
C Green(RAL6018/U)

RoHS compliant
(lead<4%)
In copper Alloy

000:"@"Logo (Standard)
00A:"ANYTEK"Logo
Any special item by
customer request,
please contact sales
department.

N=Number.of contacts
Dimension Dim A & Dim B

Dim A	(N/2-1)×3.81+4.55
Dim B	(N/2-1)×3.81

Poles	A&B Tolerance
2×2P-2×7P	+0.15/-0.15
2×8P-2×13P	+0.25/-0.25
2×14P-2×19P	+0.30/-0.30
2×20P-2×24P	+0.35/-0.35

ANYTEK

CUSTOMER COPY

ALL RIGHTS RESERVED. REPRODUCTION OR ISSUE TO THIRD PARTIES IN ANY FORM WHATEVER IS NOT PERMITTED WITHOUT WRITTEN AUTHORITY FROM THE PROPRIETOR. PROPERTY OF ANYTEK TECHNOLOGY CO., LTD

TITLE	YQ-3.81mm Series 2×2P-2×24P (Left)---High type				
PART NO.	YQxx41x0AxxxG			DWG NO.	8YQ0503
APPROVED	CHECKED	DESIGNED	DRAWN	CUST NO.	
		Aaron 2012.02.16	Aaron 2010.07.20	UNIT: mm / SCALE: NONE / SHEET: 01/01 / REV.: B	

Tolerance	
X.	±0.50
X.X	±0.30
X.XX	±0.10
X°	±1°