1.产品尺寸图Product Dimension Drawing

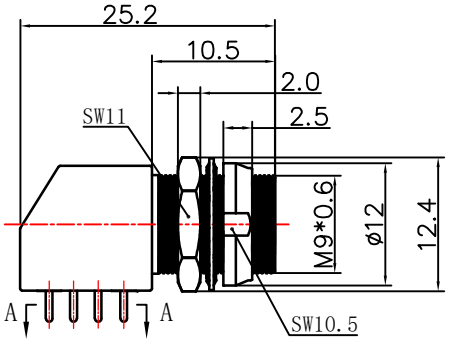

标识点
Identification points

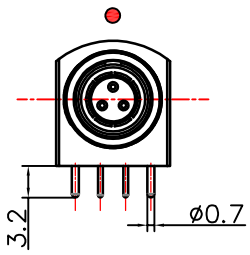

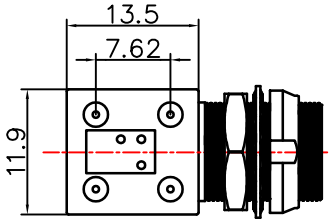

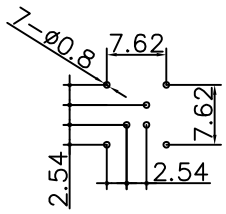

(A-A)
PCB板开孔尺寸
PCB board cut-out size

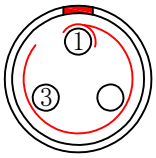

3芯孔位排列
The 3-core hole position is arranged

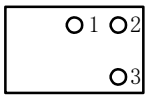

PCB孔位排列
PCB hole arrangement

2.产品电器参数Product electrical parameters

防护等级 (Ingress protection)	IP50
插拔测试 (Plugging and unplugging test)	＜5000次
产品耐温 (The product is temperature resistant)	-55° C / +250° C
盐雾腐蚀 (Salt Spray Corrosion)	>96 hr
测试电压（kV rms）针芯-针芯	0.85
测试电压（kV rms）针芯-外壳	0.7
额定电流Current rating	4.5A
湿度（最大值） Humidity (max)	＜=95 (at 60 deg C/140F)
屏蔽（分钟） Shielding (min)	75 dB(10MHz)
屏蔽（分钟） Shielding (min)	100 g (6 ms)
振动 Vibration	15 g (10Hz-1000Hz)

3.环境及表面处理产品特性Environmental and surface treatment product characteristics

外壳材料 Housing material	金属件黄铜镀镍镀铬
外绝缘体材料 Outer insulator material	PPS
绝缘体材料 Insulator material	PPS（可选PEEK）PPS (optional PEEK)

1：连接器组装生产所有公差通常为0.1mm,2：插座直接拧入螺纹孔中，螺纹 +0.05mm
1: All tolerances are usually 0.1mm for connector assembly production, 2: The socket is screwed directly into the threaded hole, the thread is +0.05mm

东莞市通瑞电子科技有限公司
CN-TRRE CONNECTE
Dongguan Tongrui Electronic Technology Co., Ltd
www.cntfre.com

0B系列弯角插座0B series right angle socket

单芯图纸Single-core drawings
单位unit:mm 修改revise:A0
视图view:
型号Model
BR.EXG.0B.104.HSN