THIS DRAWING IS UNPUBLISHED.
VERTRAULICHE UNVEROEFFENTLICHTE ZEICHNUNG
© COPYRIGHT 2013 Tyco ElectronicsCorporation
RELEASED FOR PUBLICATION 2013
FREI FUER VEROEFFENTLICHUNG
ALL RIGHTS RESERVED.
ALLE RECHTE VORBEHALTEN.

PROJEKT NR.: PRJ-11-3789

REVISIONS
AENDERUNGEN

P	LTR	DESCRIPTION BESCHREIBUNG	DATE	DWN	APVD
	A1	NEW DRAWING	14MAR2014	RS	GKT
	A2	MATERIAL IDENTIFIER ADDED ON THE PART	12MAR2023	JUS	RW

2208714-1

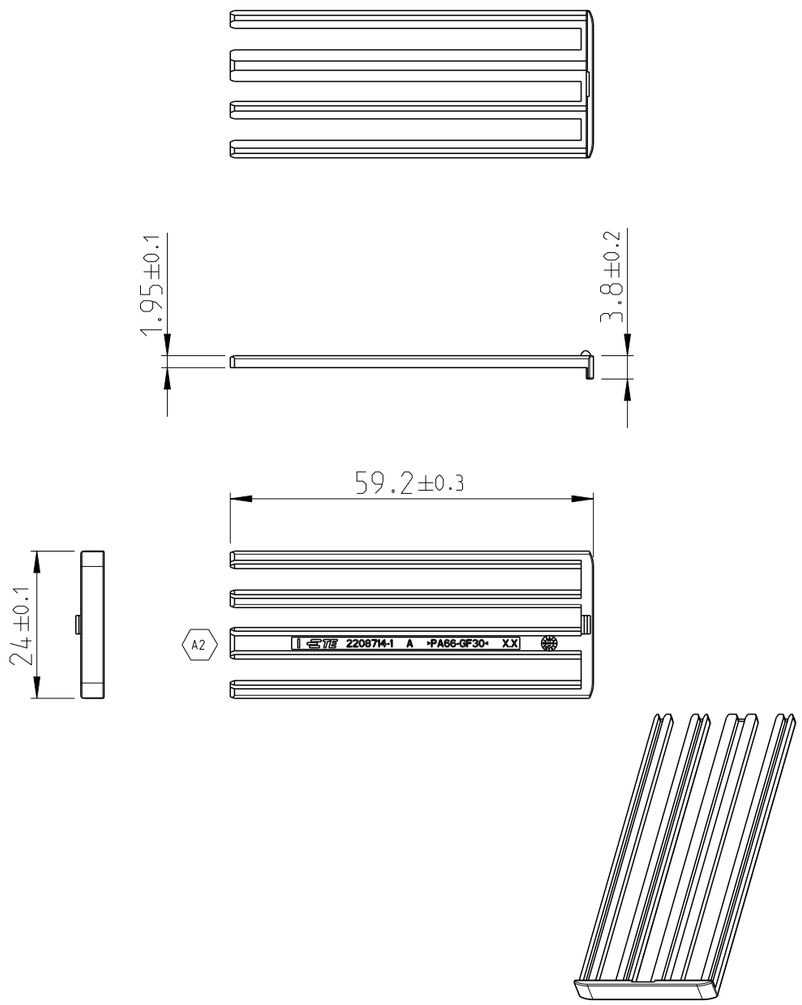

2208714-2

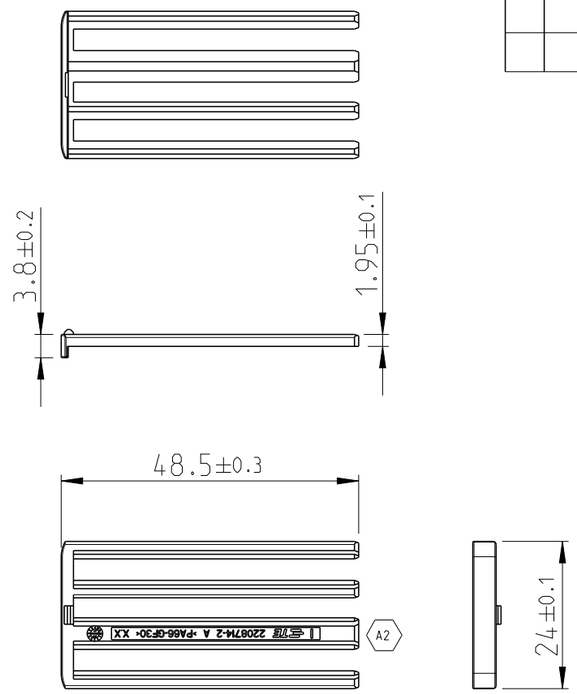

NOTES:

1. DELIVERY CONDITION - LOOSE PIECE

Bemerkungen;

1. Anlieferungszustand Teile - lose beigestellt

USED ON	PART NO.	MATERIAL	DESCRIPTION	WEIGHT (g)	COLOUR	ITEM NO.
X-2208709-X	0-2208714-2	PA66-GF30	SECONDARY LOCK 91 POS. CON.	1.40	VOILET	2
X-2208720-X	0-2208714-1	PA66-GF30	SECONDARY LOCK 105 POS. CON.	1.70	VOILET	1

PRODUCT CHARACTERISTICS ACC. QMP EMEA_12
BESONDERE MERKMALE NACH QMP EMEA_12

TOLERANCES UNLESS OTHERWISE SPECIFIED ACC. TO DIN 16901-140 (AD) CENTRIC TO NOMINAL DIMENSION. EDITION 1982-11 SHALL APPLY.
Freimasstoleranzen nach DIN 16901-140 (AD). Es gilt die Ausgabe 1982-11.

THIS DRAWING IS A CONTROLLED DOCUMENT.
DIMENSIONING AND TOLERANCING PER GPS (ISO STANDARDS).

DIMENSIONS: MASSEINHEITEN: mm

TOLERANCES UNLESS OTHERWISE SPECIFIED: ALLGEMEINTOLERANZEN
0 PLC ±-
1 PLC ±-
2 PLC ±-
3 PLC ±-
4 PLC ±-
ANGLES/WINKEL ±1°

MATERIAL: SEE TABLE
FINISH/OBERFLAECHE/FARBE: -

DWN RAMESH S 12SEP2013
CHK GOPI KT 10OCT2013
APVD ZAYC M -
PRODUCT SPEC PRODUKTSPEZ. -
APPLICATION SPEC VERARBEITUNGSSPEZ. -
WEIGHT GEWICHT SEE TABLE

TE Connectivity

NAME: SECONDARY LOCK, 91 POS AND 105 POS 1.2 CB CONTACT SYSTEM
-

SIZE	CAGE CODE	DRAWING NO ZEICHNUNGS-NR.	RESTRICTED TO NUR FUER
A3	00779	C-2208714	-

CUSTOMER DRAWING /KUNDENZEICHNUNG
SCALE MASSSTAB 1:1 SHEET BLATT 1 OF VON 1 REV A2

1470-19 (3/13)