DIMENSIONS

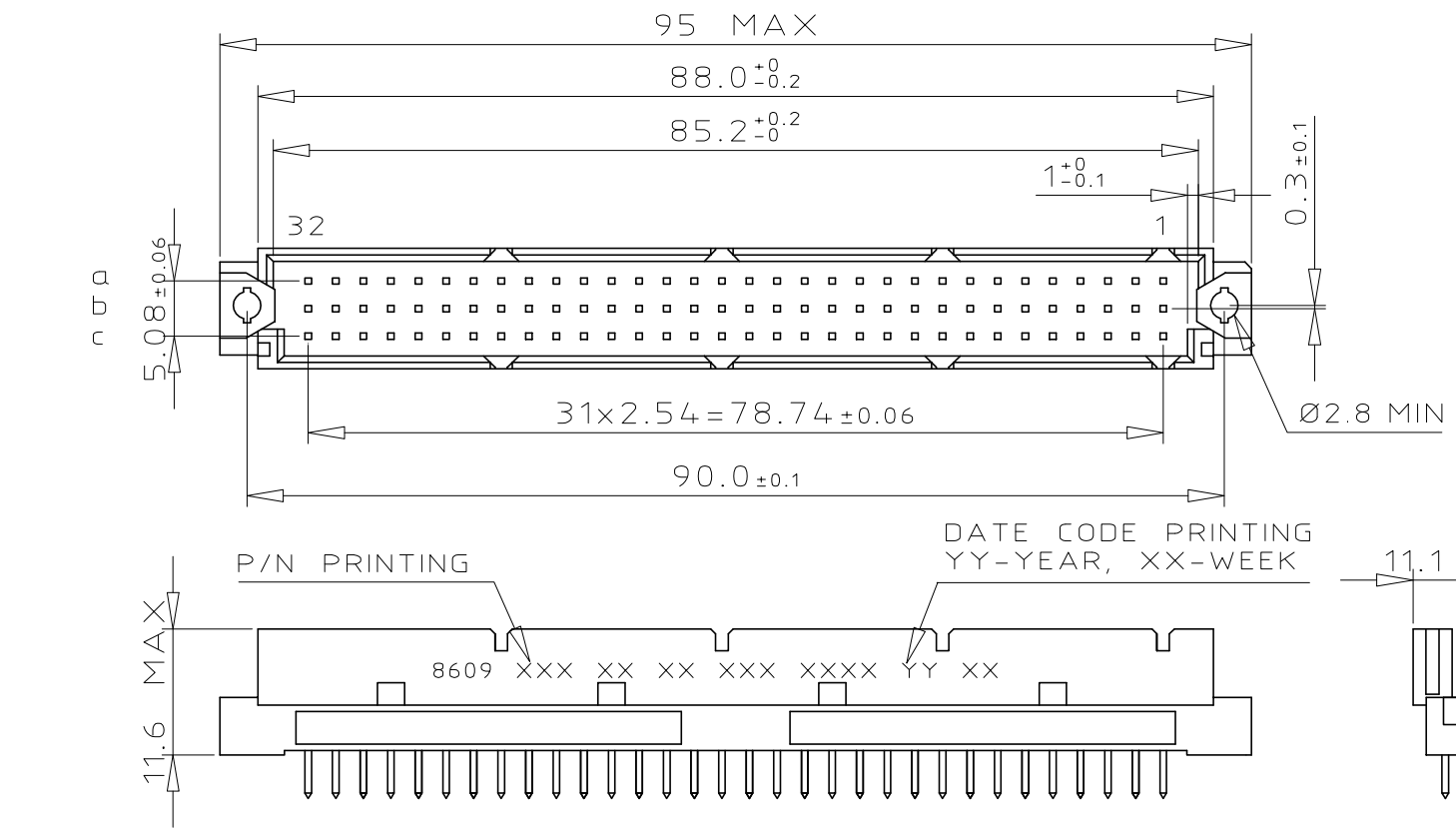

TERMINATION

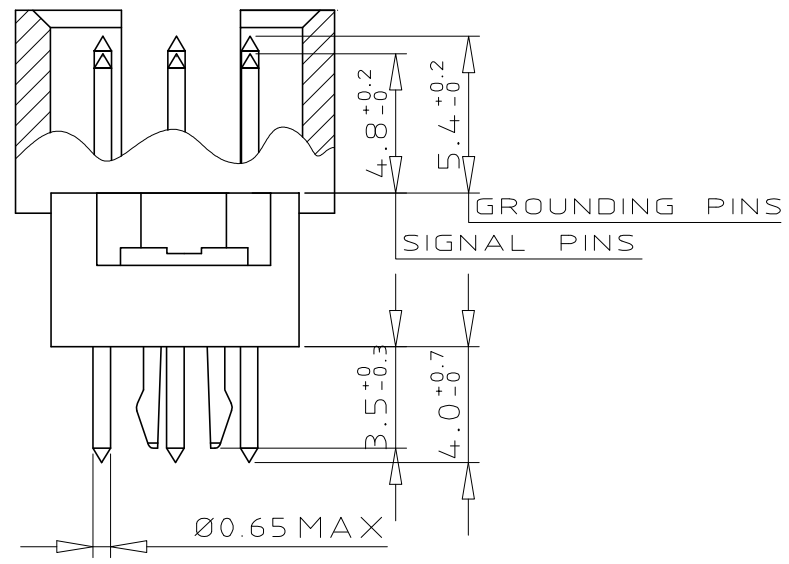

PCB LAYOUT

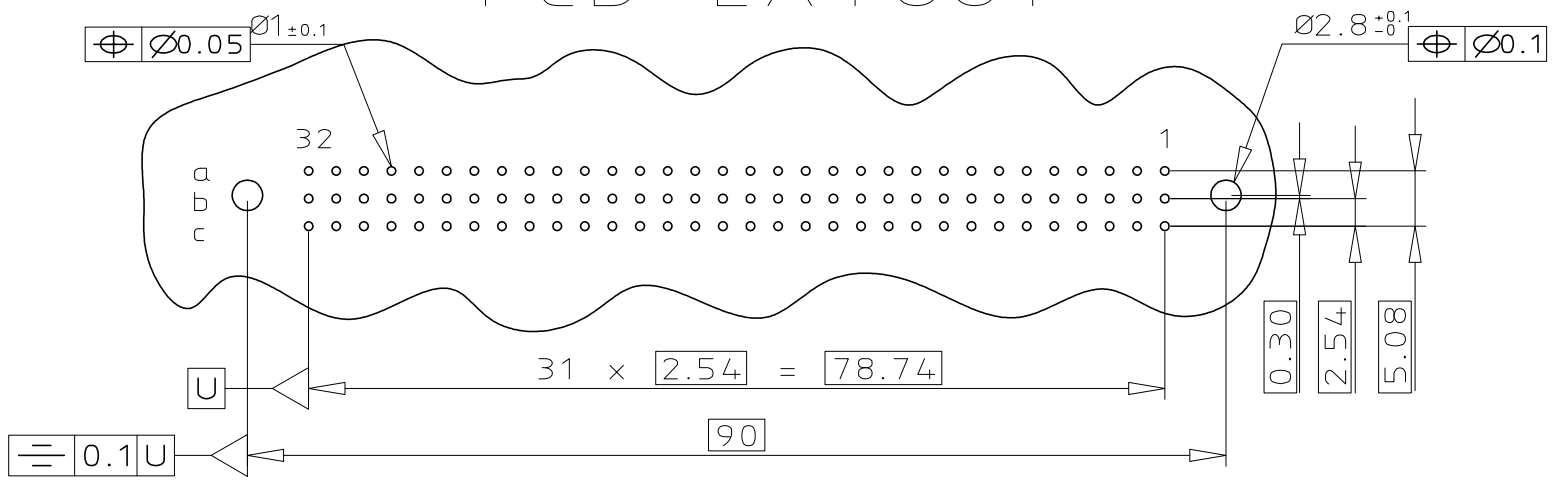

CONTACT ARRANGEMENT

	1	2	3	4	5	6	7	8	9	10	11	12	13	14	15	16	17	18	19	20	21	22	23	24	25	26	27	28	29	30	31	32
a	✓	X	X	X	X	X	X	X	X	X	X	X	X	X	X	X	X	X	X	X	X	X	X	X	X	X	X	X	X	X	X	✓
b	✓	X	X	X	X	X	X	X	X	X	X	X	X	X	X	X	X	X	X	X	X	X	X	X	X	X	X	X	X	X	X	✓
c	✓	X	X	X	X	X	X	X	X	X	X	X	X	X	X	X	X	X	X	X	X	X	X	X	X	X	X	X	X	X	X	✓

X STANDARD CONTACT ☐ EMPTY CAVITY ✓ FMLB CONTACT # LMEB CONTACT

ORDERING INFORMATION

SERIES	8609	3	96	7	8	14	7	4	5	UMLF

ROWS FITTED WITH CONTACTS
ROW a b c ..... 3 — 96

NO. OF CONTACTS

TYPE OF INSULATOR
3 ROW MALE INSULATOR 7

METHOD OF MOUNTING
REVERSE MOUNTING - STYLE R 8

TERMINATION
STRAIGHT SPILL 14

OPTIONS
NO OPTION 7
WITH HARPOONS ..... H

PERFORMANCE CLASS
DIN 41612 CLASS 3 4
DIN 41612 CLASS 2 5
DIN 41612 CLASS 1 6
AS PER MIL C 55302 / JSS 50808 8

PITCH PER ROW
2.54 mm 5

LEAD FREE VERSION - SPL LOADING ..... UMLF

GENERAL CHARACTERISTICS & RoHS INFO
REFER DRAWING C-8609-0000A

mat'l. code	surface	tolerance	projection	product family
SEE DWG C-8609-0000A	ISO 1302 ✓	ISO 406 ISO 1101		8609

ltr	ecn no	dr	date
A	I10-0130	KR	2010-06-11

tolerances unless otherwise specified

angles	linear	
0°±2°		0.X ±0.1
		0.XX ±0.1
		0.XXX ±0.1

mm

scale 3:2

dr	KESAVAN R	2010-06-11
engr	KESAVAN R	2010-06-11
chr	KESAVAN R	2010-06-11
appd	BIJU K PAUL	2010-06-11

title
DIN REVERSE HEADER
STRAIGHT SPILL DIN 41612 STYLE R

dwg no C-8609-2244 — sheet 1 of 1 — size A3

type Product Customer Drawing

sheet index	revision	A
	sheet	1

form: A3

FCIconnect.com
Copyright FCI
PDM: Rev:A STATUS: Released Printed: May 14, 2011