THIS DRAWING IS UNPUBLISHED. RELEASED FOR PUBLICATION -,- .
© COPYRIGHT - BY TYCO ELECTRONICS CORPORATION. ALL RIGHTS RESERVED.

LOC	DIST
AG	53

REVISIONS

P	LTR	DESCRIPTION	DATE	DWN	APVD
	B	REV PER ECO-09-026264	09MAR2010	HMR	DB

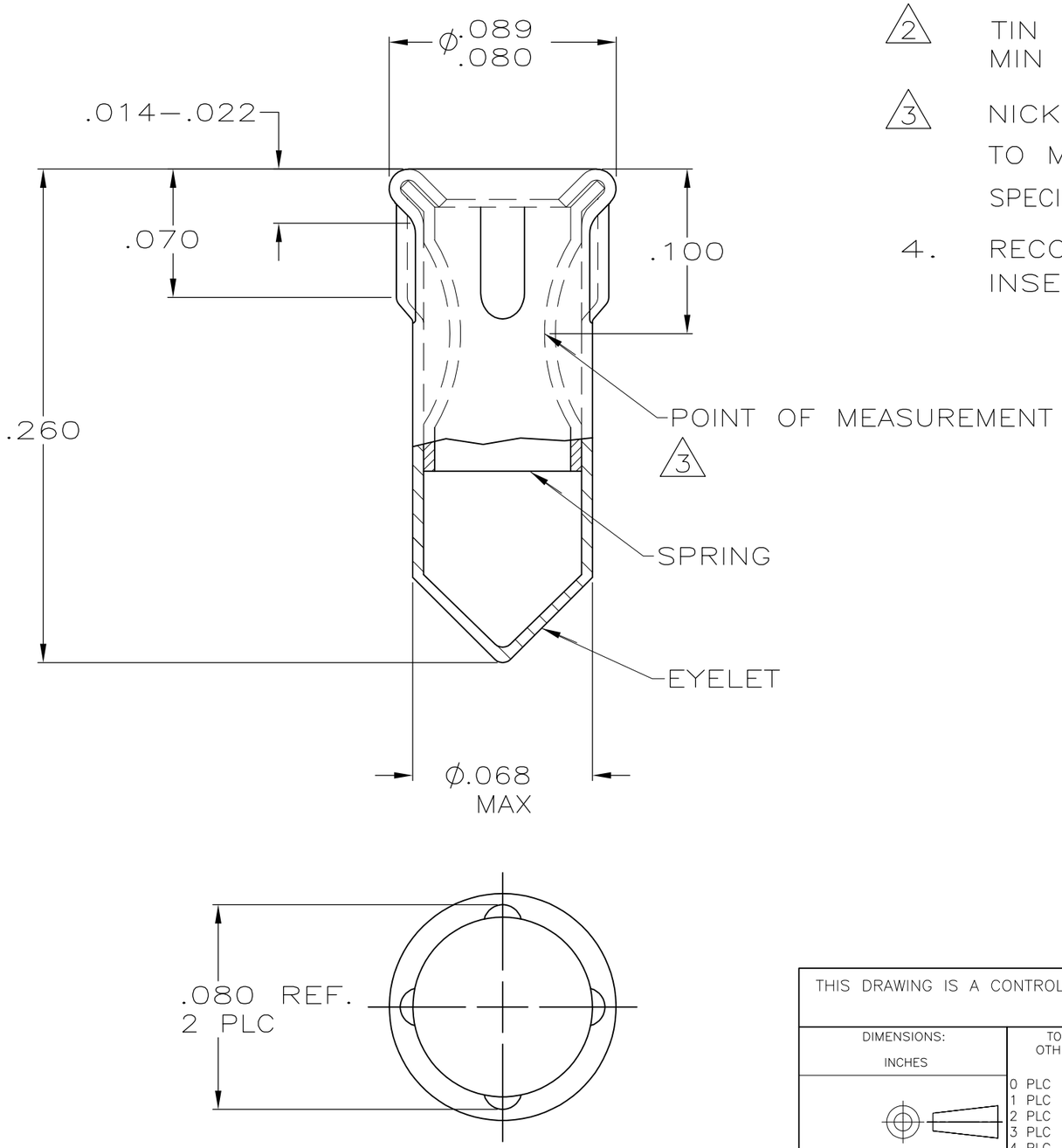

1. MATERIAL: EYELET-COPPER PER ASTM B 152
SPRING-BERYLLIUM COPPER
PER ASTM B 194

2. TIN PLATE PER ASTM B 545 .000100 MIN THICK.

3. NICKEL UNDERPLATE ALL OVER, MATING SURFACE PLATED TO MEET PERFORMANCE REQUIREMENTS OF TYCO PRODUCT SPECIFICATION 108-14008.

4. RECOMMENDED HOLE SIZE FOR MACHINE INSERTION .069-.075.

PIN		FINISH		PART NUMBER
DIA	LENGTH	SPRING	EYELET	
.037-.041	.100-.210	2, 3	2	5645500-2
				5645500-1

THIS DRAWING IS A CONTROLLED DOCUMENT.

DIMENSIONS: INCHES

TOLERANCES UNLESS OTHERWISE SPECIFIED:

0 PLC	± -
1 PLC	± -
2 PLC	± -
3 PLC	± .010
4 PLC	± -
ANGLES	± -

MATERIAL: 1

FINISH: SEE TABLE

DWN	G. ATTADIA - DOCK5	20APR2005
CHK	J. HAVENER	20APR2005
APVD	J. HAVENER	20APR2005
PRODUCT SPEC	—	
APPLICATION SPEC	—	
WEIGHT	—	

Tyco Electronics

Tyco Electronics Corporation
Harrisburg, PA 17105-3608

NAME: SOCKET, MSS, SERIES 4

SIZE	CAGE CODE	DRAWING NO	RESTRICTED TO
A3	00779	C-5645500	—

CUSTOMER DRAWING | SCALE NTS | SHEET 1 OF 1 | REV B