THIS DRAWING IS UNPUBLISHED. RELEASED FOR PUBLICATION -
© COPYRIGHT - BY TYCO ELECTRONICS CORPORATION. ALL INTERNATIONAL RIGHTS RESERVED.

LOC	DIST
-	-

REVISIONS

P	LTR	DESCRIPTION	DATE	DWN	APVD
	B	RELEASED	3-16-10	CT	KH

1. THIS KIT INCLUDES: GPRB1 PLUG SHELL SUB ASSY; TE PART NO. 1738236-1
   GPRBEP3PA 3P3 PIN INSERT; TE PART NO. 1954321-1 (INSTALLED)
   AND SIZE 5 CRIMP PIN CONTACT; TE PART NO. 1738019-1. (NOT INSTALLED)

2. MATERIALS:
   SHELL & KEY RETENTION PLATE: ALUMINUM ALLOY
   QUARTER-TURN FASTNENER: COPPER ALLOY PER ASTM B196
   CAPTIVE SCREW: STAINLESS STEEL PER AISI 303
   SCREW RETENTION CLIPS: STAINLESS STEEL PER AISI 304
   INSERT RETENTION CLIP, CURVED WASHER & FASTENER RETENTION CLIP: COPPER ALLOY PER ASTM B194
   POLARIZATION KEY: PEI THERMOPLASTIC PER ASTM D5205
   PROTECTIVE COVER: THERMOPLASTIC ELASTOMER

3. FINISH:
   SHELL: ELECTROLESS NICKEL PER SAE AMS-C-26074, CLASS 1.
   KEY RETENTION PLATE: ANODIZED, COLOR: CLEAR

4. TE PART NO. AND DATE CODE MARKED IN THIS AREA.

5. #4-40 CAPTIVE SCREWS ON KEY RETENTION PLATE RECOMMENDED TORQUE: 0.8 N-m.

6. THE POLARIZATION KEYS & RETENTION PLATE ARE SHIPPED UNASSEMBLED FOR -1.

7. THIS PRODUCT IS SOLD BY Tyco Electronics UNDER A LICENSE FROM RADIALL SA.

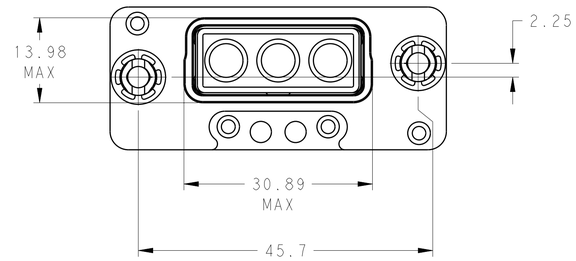

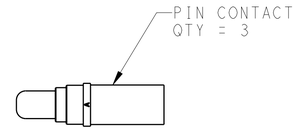

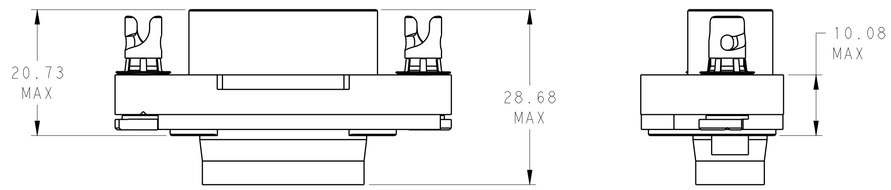

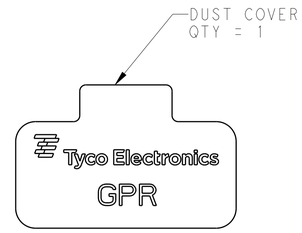

CODE NUMBER	KEY 1	KEY 2
01	A	A
02	A	B
03	A	C
04	A	D
05	B	A
06	B	B
07	B	C
08	B	D
09	C	A
10	C	B
11	C	C
12	C	D
13	D	A
14	D	B
15	D	C
16	D	D

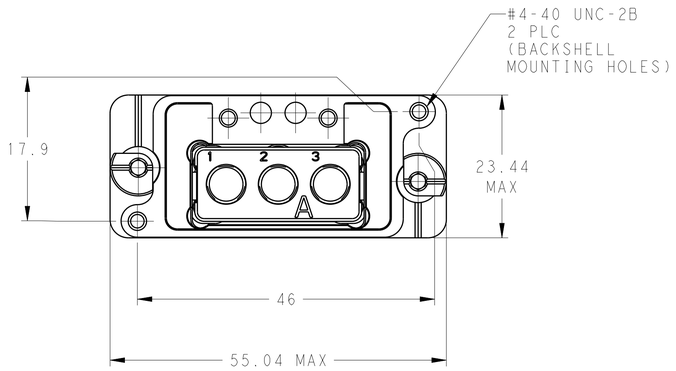

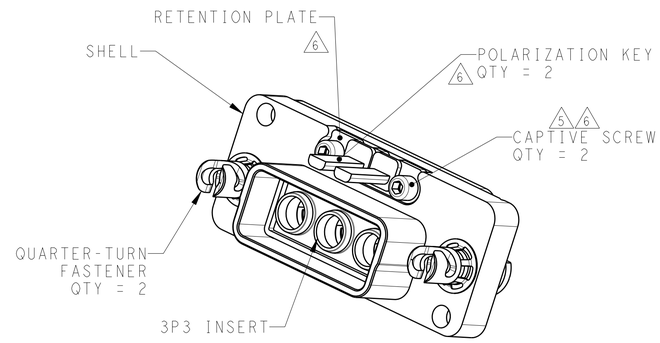

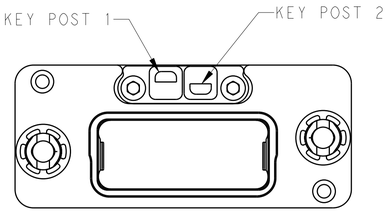

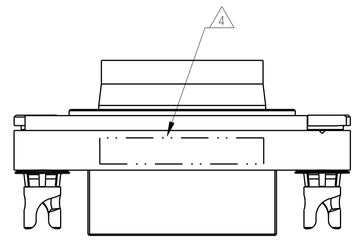

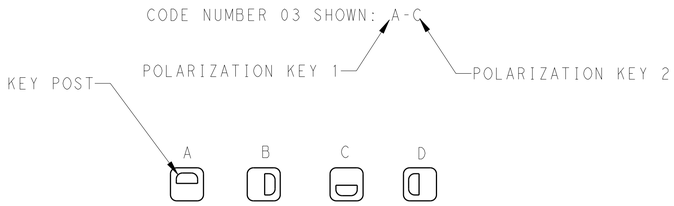

PLUG CONNECTOR POLARIZATION
SHOWN WITHOUT INSERT

"16"	2101537-5
"11"	2101537-4
"06"	2101537-3
"01"	2101537-2
UNINSTALLED	2101537-1
KEYING POSITIONS	PART NO

THIS DRAWING IS A CONTROLLED DOCUMENT FOR TYCO ELECTRONICS CORPORATION. IT IS SUBJECT TO CHANGE AND THE CONTROLLING ENGINEERING ORGANIZATION SHOULD BE CONTACTED FOR THE LATEST REVISION.

DWN	C.C.THOMAS	11AUG2009
CHK	K.HOGAN	11AUG2009
APVD	K.HOGAN	11AUG2009
PRODUCT SPEC	-	
APPLICATION SPEC	-	
WEIGHT	-	

Tyco Electronics
Tyco Electronics
Harrisburg, PA 17105-3608

DIMENSIONS: mm

TOLERANCES UNLESS OTHERWISE SPECIFIED:
0 PLC ±-
1 PLC ±.5
2 PLC ±.13
3 PLC ±.013
4 PLC ±.0001
ANGLES ±-

MATERIAL - -
FINISH - -

NAME: GPRB1 PLUG ASSY,3P3 WITH PIN CONTACTS -

SIZE	CAGE CODE	DRAWING NO	RESTRICTED TO
A1	00779	C-2101537	-

CUSTOMER DRAWING | SCALE 2:1 | SHEET 1 OF 1 | REV B

4805 (2/09)

Pro/ENGINEER DRAWING