Jan.1.2022 Copyright 2022 HIROSE ELECTRIC CO., LTD. All Rights Reserved.
In case of consideration for using Automotive equipment / device which demand high reliability, kindly contact our sales window correspondents.

	COUNT	DESCRIPTION OF REVISIONS	BY	CHKD	DATE		COUNT	DESCRIPTION OF REVISIONS	BY	CHKD	DATE
△					. .	△					. .
△					. .	△					. .
△					. .	△					. .

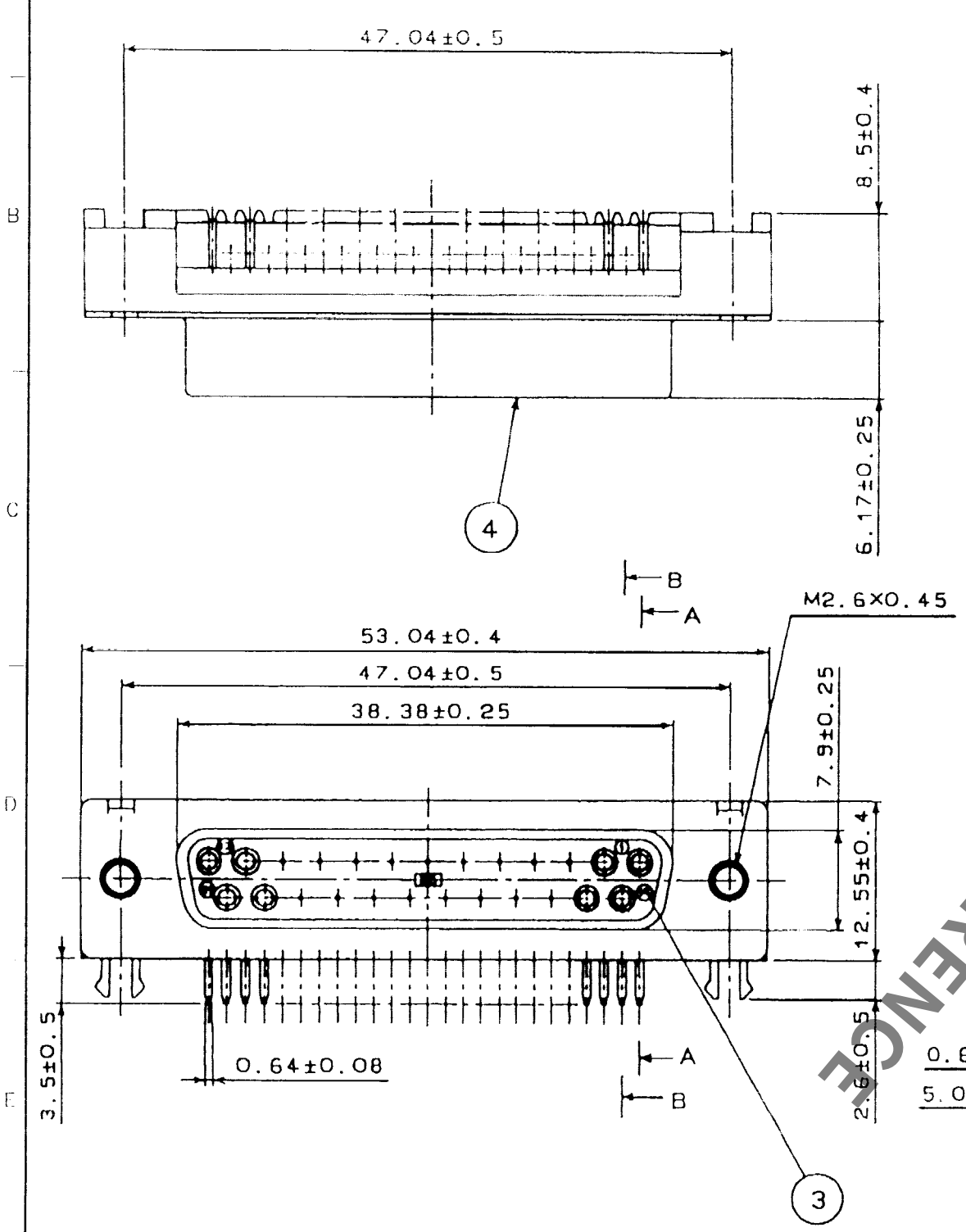

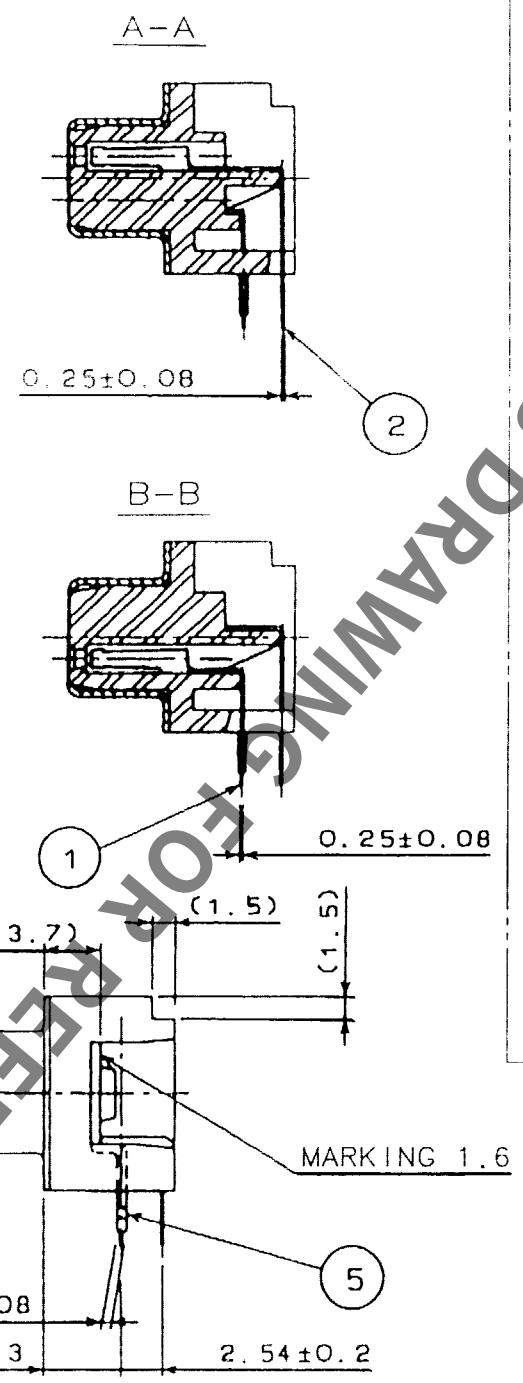

RECOMMENDED PC BOARD HOLE PATTERN
(SCALE 1/1)

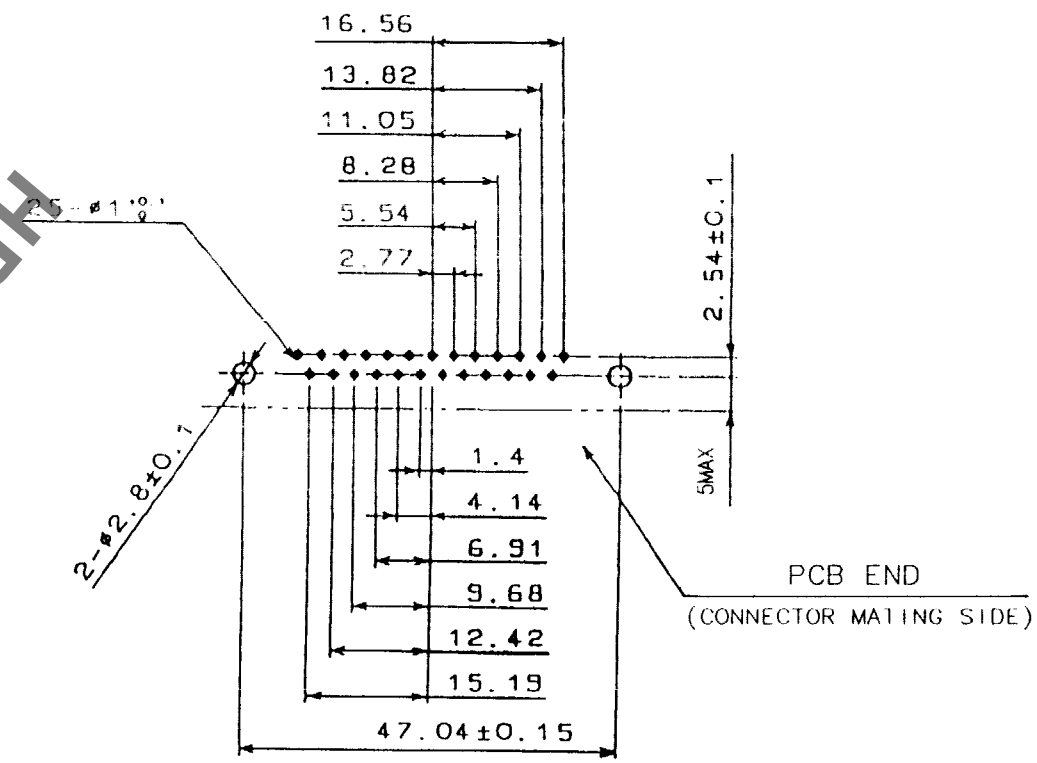

NOTES
1. PLEASE KEEP THE TOLERANCE TO LESS THAN ±0.1 FOR THE DIMENSIONS WITHOUT TOLERANCE.
2. THICKNESS OF PC BOARD SHALL BE 1.6mm.
3. REF.NO. (3) AND (4) SHALL BE TEMPORARILY.
   REF.NO. (3) AND (5) SHALL BE TEMPORARILY.
4. LOCK SCREW SHALL BE SOLD SEPARATELY.

HRS DRAWING FOR REFERENCE

NO.	MATERIAL	FINISH, REMARKS	NO.	MATERIAL	FINISH, REMARKS
3	PBT	UL94V-0(BLACK)			
2	PHOSPHOR BRONZE	SELECTIVE GOLD PLATING 0.2μm	5	BRASS	TIN PLATING
1	PHOSPHOR BRONZE	SELECTIVE GOLD PLATING 0.2μm	4	STEEL	NICKEL PLATING

CODE NO.(OLD)	DRAWN	DESIGNED	CHECKED	APPROVED	RELEASED
CL	03·8·26	03·8·26	03·08·26	03·08·28	. .

SCALE 2 : 1	DRAWING NO. EDC3-045291-01	PART NO. RDBG-25SE1(50)
UNITS mm	HRS HIROSE ELECTRIC CO., LTD	CODE NO. CL211-5206-3-50

1/1

FORM NO.229

TO
Q