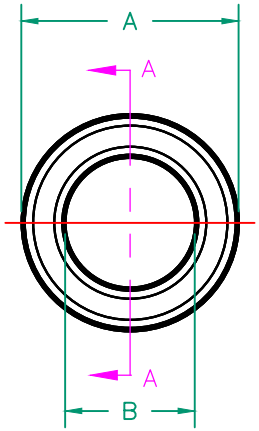

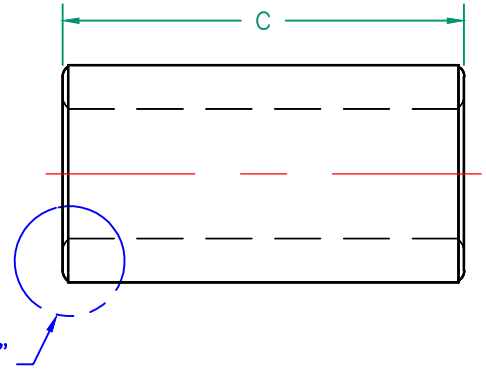

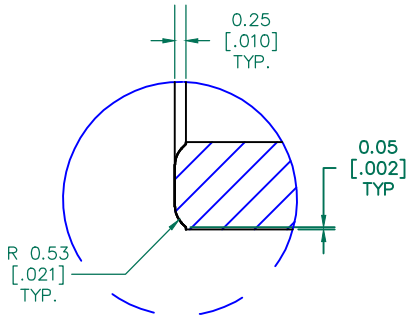

DETAIL "A"
CHAMFER
SCALE=6:1

IMPEDANCE (Z)			
Frequency	25 MHz	100 MHz	300 MHz
Nominal (REF)	69 Ω	153 Ω	260 Ω
Minimum	- Ω	116 Ω	- Ω

Z vs. FREQUENCY
(REF. ONLY)

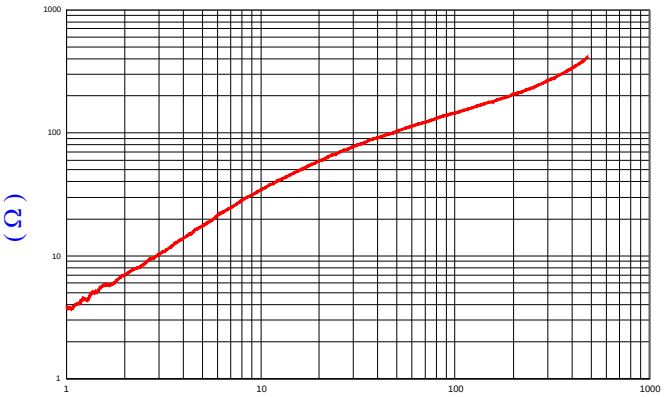

AGILENT E4991A Impedance/Material Analyzer
HP 16092A Test Fixture, REF# 5900

FERRITE CORE DIMENSIONS (SPEC): mm [Inches]

A	10.01 [.394]	±	0.40 [.016]
B	5.97 [.235]	±	0.30 [.012]
C	20.00 [.787]	±	0.50 [.020]

WEIGHT/1000 4.34 kgs [9.57 Lbs]

NOTES: UNLESS OTHERWISE SPECIFIED

1. COSMETIC SPECIFICATION REFER TO WI-QA-038.

SCALE DRAWING 1:1

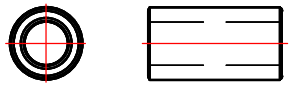

28B0395-600

CUSTOMER P/N		REV.	
N/A			
DIMENSIONS ARE IN mm[INCHES].			
A	NEW RELEASE	09/16/2019	Jcai
REV	DESCRIPTION	DATE	INT

This print is the property of Laird Tech. and is loaned in confidence subject to return upon request and with the understanding that no copies shall be made without the written consent of Laird Tech. All rights to design or invention are reserved.

Laird

PROJECT/PART NUMBER:	REV	PART TYPE:	DRAWN BY:
28B0395-600	A	FERRITE CORE	Jcai

DATE:	SCALE:	MATERIAL:
09/16/2019	3:1	Ferrite
CAD # 28B0395-600-A	TOOL # B0395	