MATERIAL NUMBER	ENG NO.	DESCRIPTION	INSULATOR KEYING POSITION	HORSEPOWER RATING
1122190015	ARC30FHDA01	ARC 30A FHD 125VAC 1P+N+G	7	1 HP
1122190016	ARC30FHDB02	ARC 30A FHD 250VAC 2P+G		3 HP
1122190017	ARC30FHDB03	ARC 30A FHD 250VAC 3P+G		5 HP
1122190018	ARC30FHDAB04	ARC 30A FHD 125/250VAC 2P+N+G		NA
1122190019	ARC30FHDC02	ARC 30A FHD 208VAC 2P+G	16	NA
1122190020	ARC30FHDC03	ARC 30A FHD 208VAC 3P+G		5 HP
1122190021	ARC30FHDAC05	ARC 30A FHD 120/208VAC 3P+N+G		NA
1122190022	ARC30FHDD01	ARC 30A FHD 277VAC 1P+N+G	4	NA
1122190023	ARC30FHDE02	ARC 30A FHD 480VAC 2P+G		NA
1122190024	ARC30FHDE03	ARC 30A FHD 480VAC 3P+G		10 HP
1122190025	ARC30FHDDE05	ARC 30A FHD 277/480VAC 3P+N+G		NA
1122190026	ARC30FHDF02	ARC 30A FHD 600VAC 2P+G	14	NA
1122190027	ARC30FHDF03	ARC 30A FHD 600VAC 3P+G		NA
1122190028	ARC30FHDGF05	ARC 30A FHD 347/600VAC 3P+N+G		NA

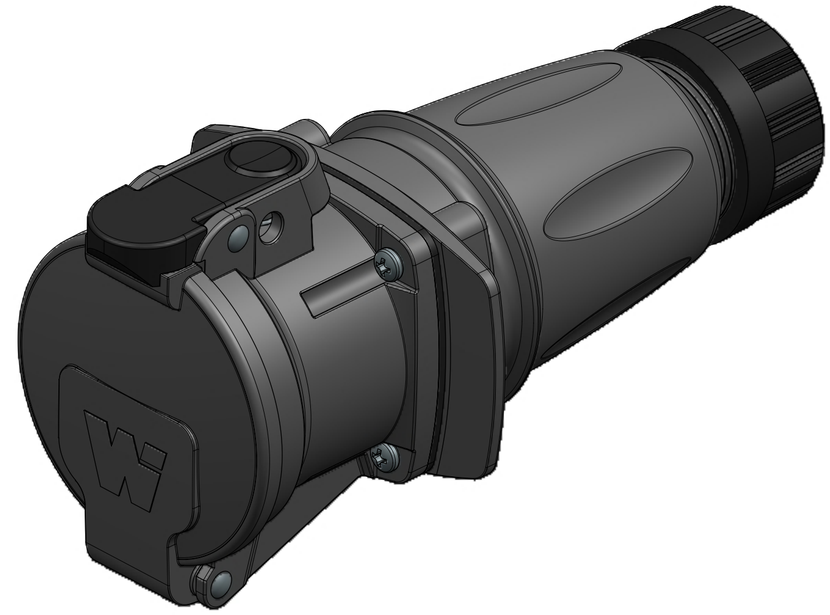

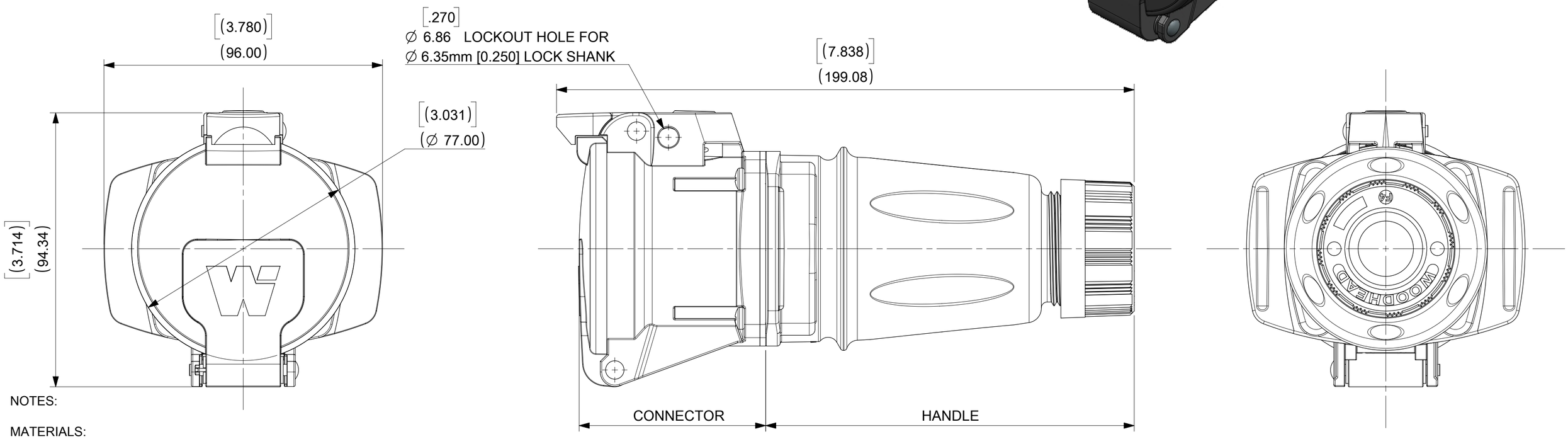

NOTES:

MATERIALS:
- HOUSINGS AND INSULATORS: GLASS FILLED PBT
- CONTACTS: COPPER ALLOY WITH A SILVER NICKEL TIP, SILVER PLATED
- MOUNTING AND INTERFACE GASKETS: SILICONE
- GROMMET - RUBBER
- FRICTION RING - NATURAL POLYETHYLENE
- COMPRESSION NUT - BLACK PBT
- SELF TAPPING SCREWS - STAINLESS STEEL

RATINGS:
- CURRENT: 30 AMPS
- VOLTAGE AND HORSEPOWER: SEE TABLE
- OPERATING TEMPERATURE: -25°C (-13°F) TO 60°C (140°F)
- ENVIRONMENTAL: TYPE 4X, IP69K
- WIRING CAPACITY: 12AWG MIN. TO 8 AWG MAX.
- TORQUE TERMINAL SCREWS TO 1.7 N-M (15 in/lbs)
- AGENCY: UL LISTING PENDING
  - SWITCH RATED RECEPTACLE/CONNECTOR
  - BRANCH CIRCUIT DISCONNECT SWITCH
  - MOTOR CIRCUIT DISCONNECT SWITCH IF HP RATED

CONNECTOR AND HANDLE ARE PACKAGED AS SUB-ASSEMBLIES AND WILL REQUIRE END USER ASSEMBLY.

THIS DRAWING REPLACES SD-112219-002.

GROMMET P/N	GROMMET COLOR	CABLE DIAMETER RANGE
1301800411	GRAY	12.7mm - 15.9mm (.500" - .625")
1301800283	ORANGE	15.9mm - 19.0mm (.625" - .750")
1301800413	BLACK	19.0mm - 22.2mm (.750" - .875")

ARC30FHDE03 SHOWN

THIS DRAWING CONTAINS INFORMATION THAT IS PROPRIETARY TO MOLEX ELECTRONIC TECHNOLOGIES, LLC AND SHOULD NOT BE USED WITHOUT WRITTEN PERMISSION

SYMBOLS: = 0 (A) = 0 (C) = 0 (F) = 0 (S) = 0 = 0 (C) = 0 = 0 = 0 = 0

DIMENSION UNITS: INCH — SCALE: 1:1

GENERAL TOLERANCES (UNLESS SPECIFIED)

	MM	INCH
4 PLACES	±	±
3 PLACES	±	±
2 PLACES	±	±
1 PLACE	±	±
0 PLACES	±	±
ANGULAR TOL	± °	

DRAFT WHERE APPLICABLE MUST REMAIN WITHIN DIMENSIONS

CURRENT REV DESC: ADDED 10HP,NEW NOTES

EC NO: 604773
DRWN: MJANTELEZIO 2018/09/20
CHK'D: JFMURPHY 2018/11/05
APPR: JFMURPHY 2018/11/05

INITIAL REVISION:
DRWN: DRWN BY XXXX/XX/XX
APPR: APPR BY XXXX/XX/XX

THIRD ANGLE PROJECTION — DRAWING: C-SIZE — SERIES: 112219

molex

ARC 30A FHD 480VAC 3P+G

PRODUCT CUSTOMER DRAWING

DOCUMENT NUMBER	DOC TYPE	DOC PART	REVISION
1122190024	PSD	000	B2

MATERIAL NUMBER — CUSTOMER: GENERAL MARKET — SHEET NUMBER: 1 OF 2

DOCUMENT STATUS	P1	RELEASE DATE	2018/11/05 17:31:25

FORMAT: Eng-lega-master-tb-prod-C
REVISION: D
DATE: 2018/01/18

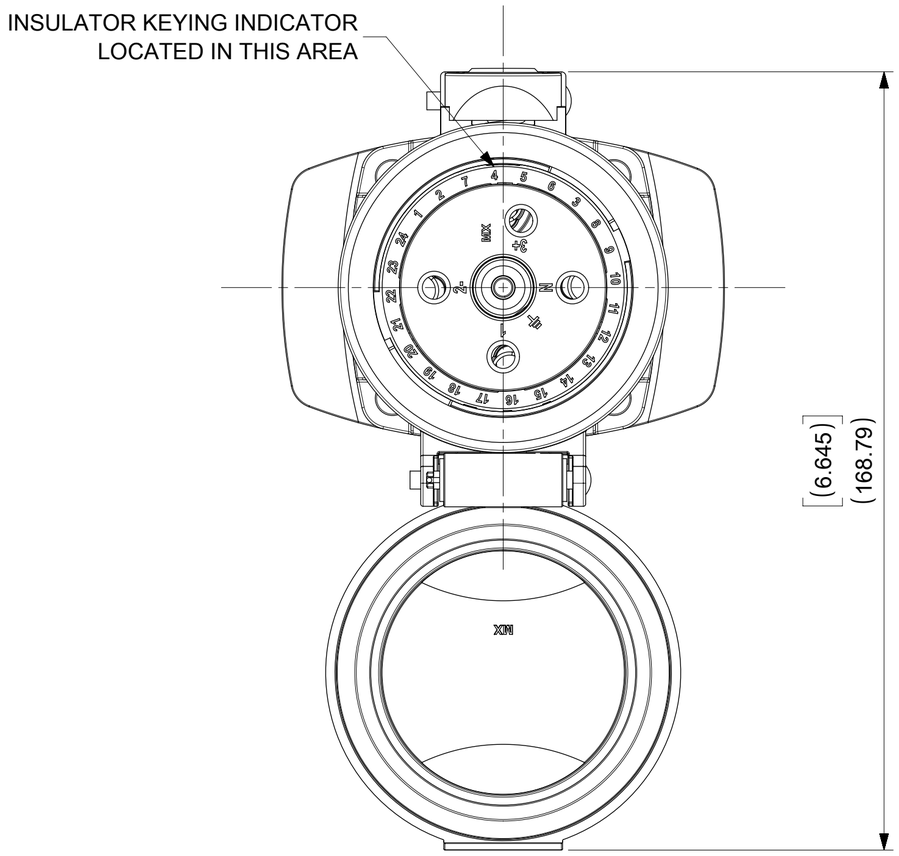

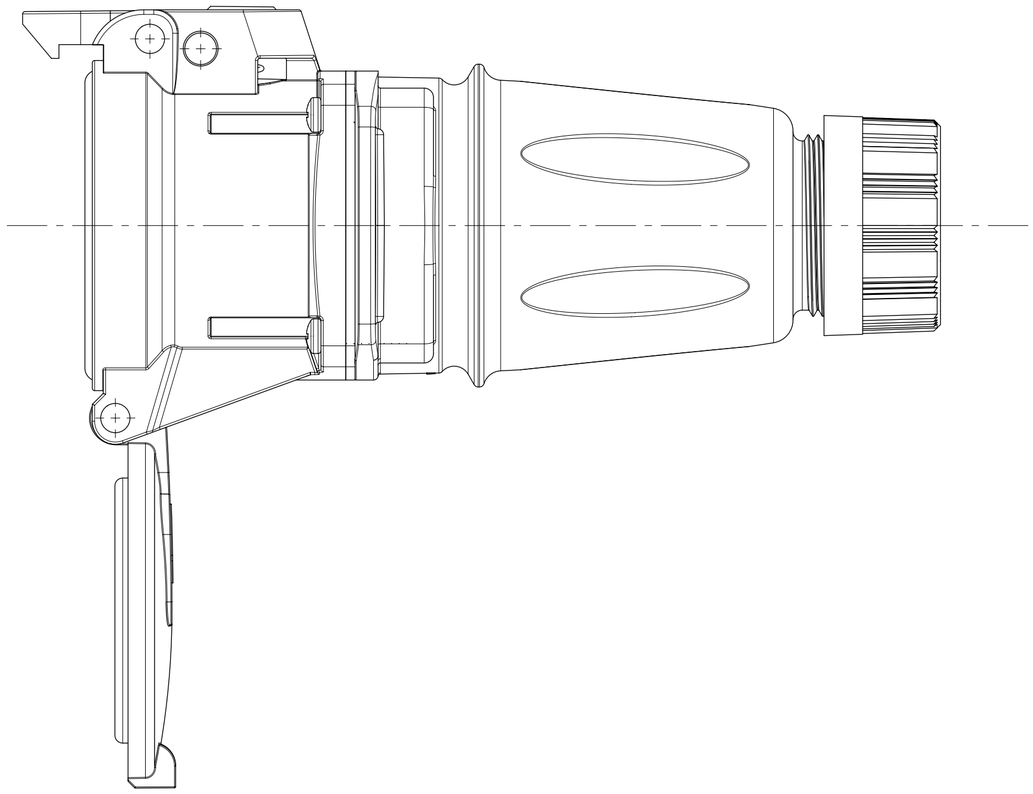

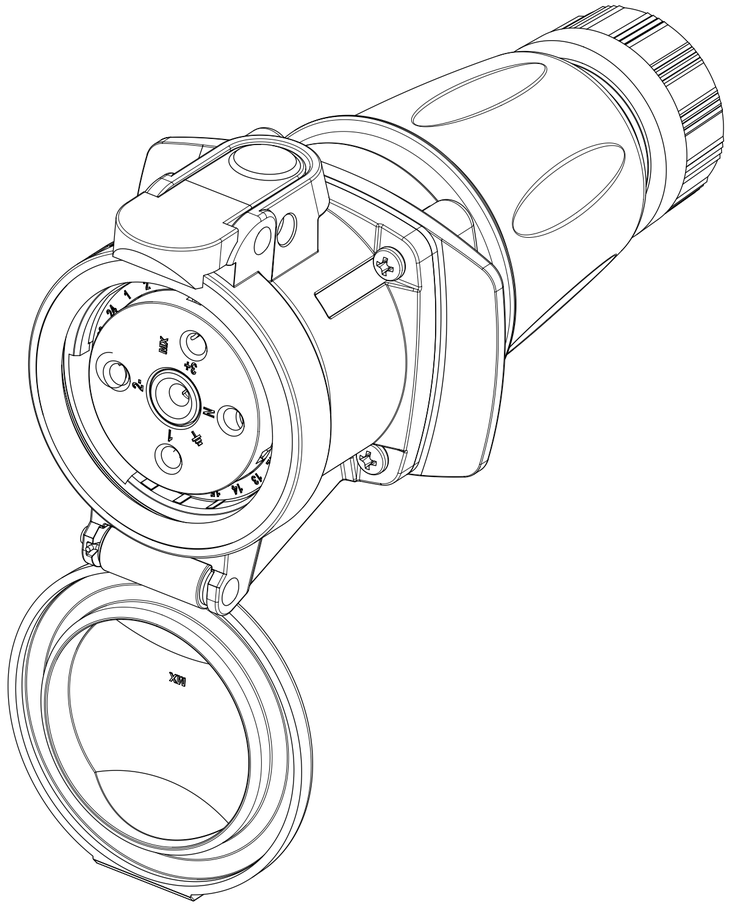

ARC30FHDE03 SHOWN

SYMBOLS	THIS DRAWING CONTAINS INFORMATION THAT IS PROPRIETARY TO MOLEX ELECTRONIC TECHNOLOGIES, LLC AND SHOULD NOT BE USED WITHOUT WRITTEN PERMISSION			
= 0	DIMENSION UNITS: INCH	SCALE: 1:1	CURRENT REV DESC: ADDED 10HP,NEW NOTES	molex
= 0	GENERAL TOLERANCES (UNLESS SPECIFIED)			
= 0	MM / INCH		EC NO: 604773	ARC 30A FHD 480VAC 3P+G
= 0	4 PLACES ± / ±		DRWN: MJANTELEZIO 2018/09/20	
= 0	3 PLACES ± / ±		CHK'D: JFMURPHY 2018/11/05	
= 0	2 PLACES ± / ±		APPR: JFMURPHY 2018/11/05	PRODUCT CUSTOMER DRAWING
= 0	1 PLACE ± / ±		INITIAL REVISION:	DOCUMENT NUMBER / DOC TYPE / DOC PART / REVISION
= 0	0 PLACES ± / ±		DRWN: DRWN BY XXXX/XX/XX	1122190024 / PSD / 000 / B2
= 0	ANGULAR TOL ± °		APPR: APPR BY XXXX/XX/XX	
= 0	DRAFT WHERE APPLICABLE MUST REMAIN WITHIN DIMENSIONS	THIRD ANGLE PROJECTION	DRAWING: C-SIZE / SERIES: 112219	MATERIAL NUMBER / CUSTOMER: GENERAL MARKET / SHEET NUMBER: 2 OF 2

DOCUMENT STATUS	P1	RELEASE DATE	2018/11/05 17:31:25

FORMAT: Eng-lega-master-tb-prod-C
REVISION: 01
DATE: 2018/01/18