Rev	AWO #	Description	Date	Appr
-		RELEASED	9/25/20	

APPROVED: _____

DATE: _____ TITLE: _____

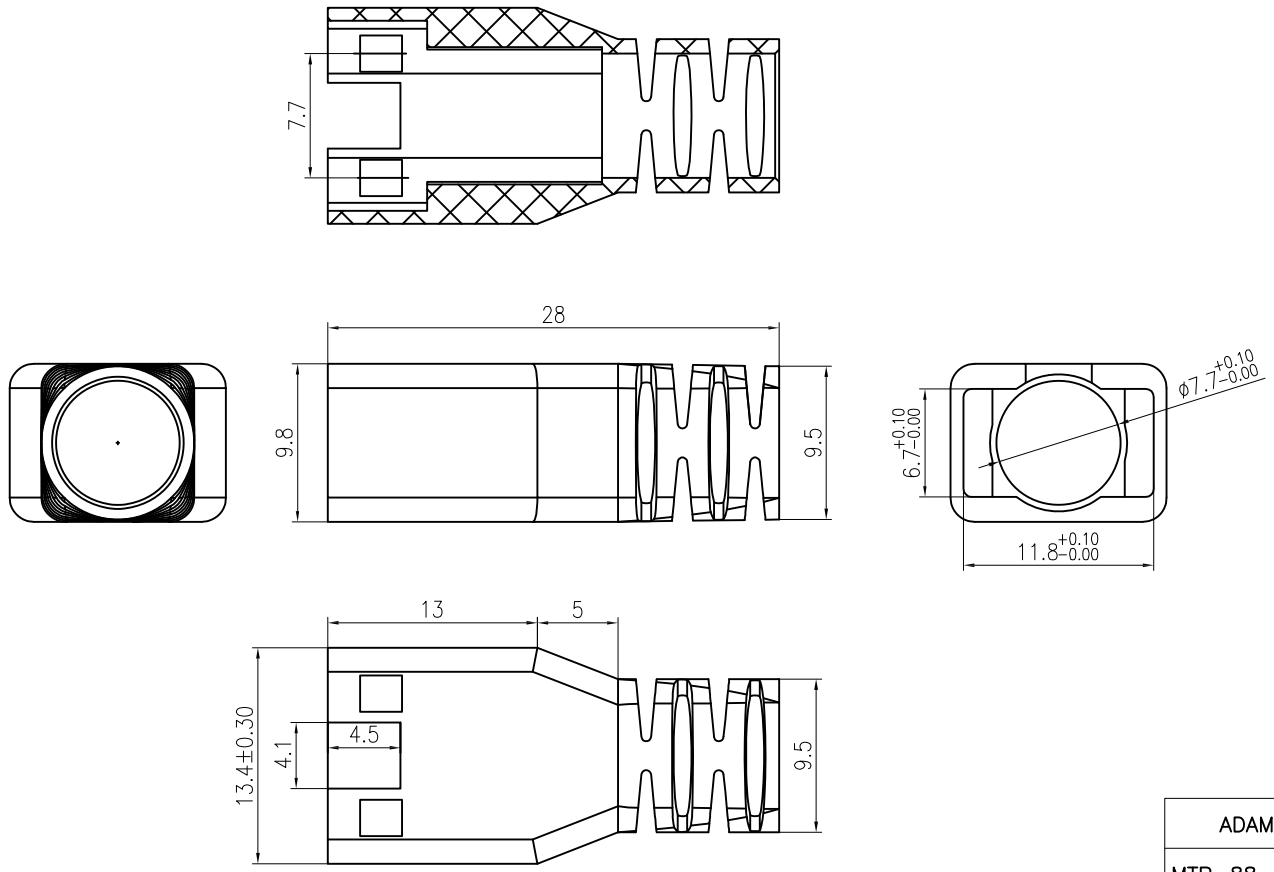

ADAM P/N	MATERIAL
MTP-88-C6-SR-A1	PC Clear
MTP-88-C8-SR-A2	TR55 Clear

SPECIFICATIONS:
Material:
Insulator: See Chart, Color: Clear
Environmental:
Lead free, RoHS compliant

RoHS COMPLIANT

UNLESS OTHERWISE SPECIFIED
ALL DIMENSIONS ARE MILLIMETERS
TOLERANCES: EXCEPT AS NOTED

MM		ANGLE
0~15	± 0.15	± 1°
15~30	± 0.20	
30~	± 0.25	

APPROVALS		DATE
DRAWN	LH	9/25/20
CHECKED	AY1	9/25/20
APPROVED		

ADAM TECH INTERCONNECTS
909 Rahway Avenue,
Union, NJ 07083
Phone: 908-687-5000
Fax: 908-687-5710

TITLE
MODULAR TELEPHONE PLUG, 8P
CATE 6, STRAIN RELIEF

SIZE	PART NO.	REV.
X	MTP-88-C6-SR-AX	-

REF: S00005C | SCALE: NTS | SHEET 1 OF 1