THIS DRAWING IS UNPUBLISHED. RELEASED FOR PUBLICATION -,- .
© COPYRIGHT - By - ALL RIGHTS RESERVED.

REVISIONS

P	LTR	DESCRIPTION	DATE	DWN	APVD
	N1	REVISED PER ECO-11-011757	08JUN11	HMR	DR
	N2	REVISED PER ECO-17-008808	07MAR2018	RS	DR

AMP
WIRE RANGE

16-14 AWG
SOLID OR STRANDED

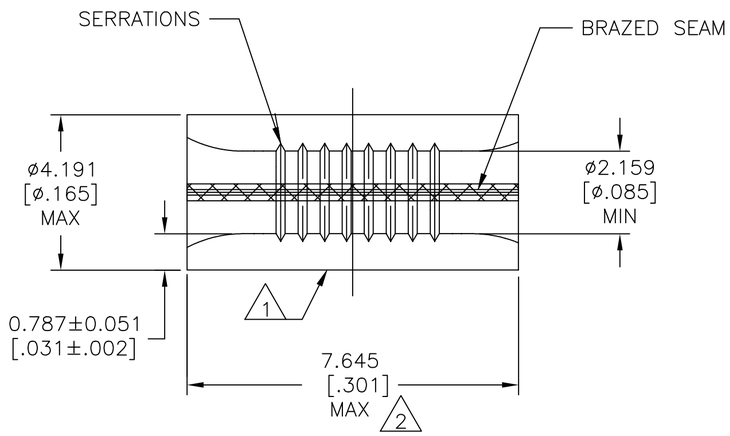

1. STAMP AMP 16-14* APPROX AS SHOWN
2. MAXIMUM LENGTH DOES NOT INCLUDE MANUFACTURING TABS
3. MATERIAL: COPPER PER ASTM B-152 ANNEALED
4. FINISH: TIN PLATE 0.00254 [.000100] MIN EXT THK PER ASTM B-545
5. FINISH: TIN/LEAD (60/40) PLATE, 0.00254 [.000100] MIN EXT THK PER SAE-AMS-P-81728
6. NOTE DELETED
7. UL LISTED E13288, 16-14 AWG SOLID OR STRANDED
8. CSA CERTIFIED LR7189, 16-14 AWG SOLID OR STRANDED
9. NOTE DELETED
10. GOLD PLATE 0.00127[.000050] MIN EXT THK PER ASTM B488, TYPE1, CODE C OVER NICKEL PLATE 0.00127[.000050] MIN EXT THK PER SAE AMS QQ-N-290 OVER Cu FLASH PER SAE AMS 2418

34137

MAX TEMP	APPROVALS	FINISH	QTY	PACKAGE TYPE	PART NO
170°C[338°F]	7 8	4	100	LOOSE PIECE, BOX	8-34137-1
260°C[500°F]	----	10	1000	LOOSE PIECE	34137-4
170°C[338°F]	----	5	1000	LOOSE PIECE	34137-3
170°C[338°F]	7 8	4	1000	LOOSE PIECE	34137

AMP INCORPORATED
CUSTOMER SERVICE SYSTEMS

FOR ADDITIONAL PRODUCT INFORMATION OR COPIES OF DRAWINGS AND TECHNICAL DOCUMENTS	PRODUCT INFORMATION CENTER 1-800-522-6752
FOR APPLICATION TOOLING INFORMATION	TOOLING ASSISTANCE CENTER 1-800-722-1111
FOR ORDER ENTRY	1-800-526-5142

MAX RECOMMENDED OPERATING TEMPERATURE: SEE TABLE

VOLTAGE RATING: N/A

CIRCULAR MIL AREA: 1.04-2.62mm²[2,050-5,180] SOLID OR STRANDED

THIS DRAWING IS A CONTROLLED DOCUMENT FOR AMP INCORPORATED. IT IS SUBJECT TO CHANGE AND THE CONTROLLING ENGINEERING ORGANIZATION SHOULD BE CONTACTED FOR THE LATEST REVISION.

THIS DRAWING IS A CONTROLLED DOCUMENT.

DIMENSIONS: mm [INCHES]

TOLERANCES UNLESS OTHERWISE SPECIFIED:
0 PLC ± -
1 PLC ± -
2 PLC ± -
3 PLC ± 0.127[.005]
4 PLC ± -
ANGLES ± -

MATERIAL: - 3

FINISH: SEE TABLE

DWN TA BRINKMAN 4-13-93
CHK DA PATTERSON 4-13-93
APVD DA PATTERSON 4-13-93
PRODUCT SPEC: UL 486 C
APPLICATION SPEC: —
WEIGHT

TE Connectivity Ltd.

NAME: SPLICE, PARALLEL, SOLISTRAND 16-14 AWG

SIZE	CAGE CODE	DRAWING NO	RESTRICTED TO
A2	00779	C-34137	—

CUSTOMER DRAWING | SCALE 10:1 | SHEET 1 OF 1 | REV N2

1471-9 (1/15)